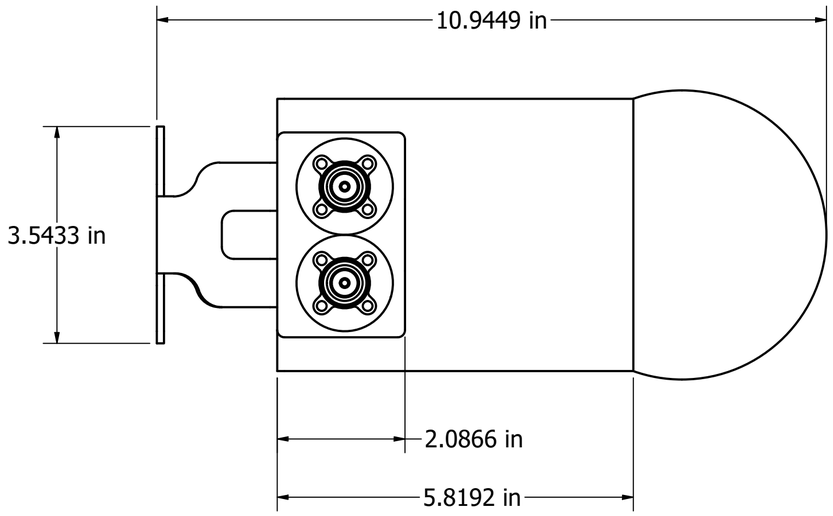

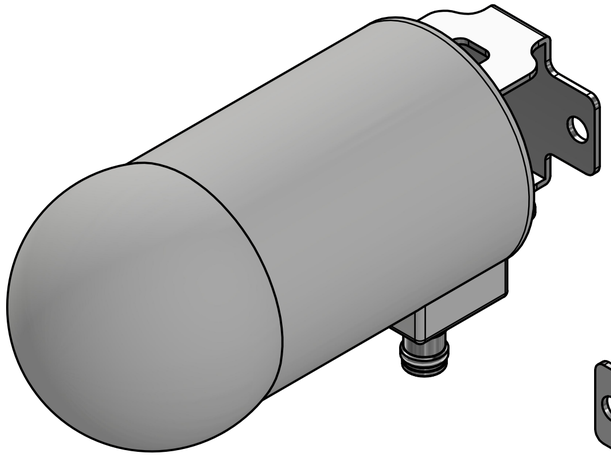

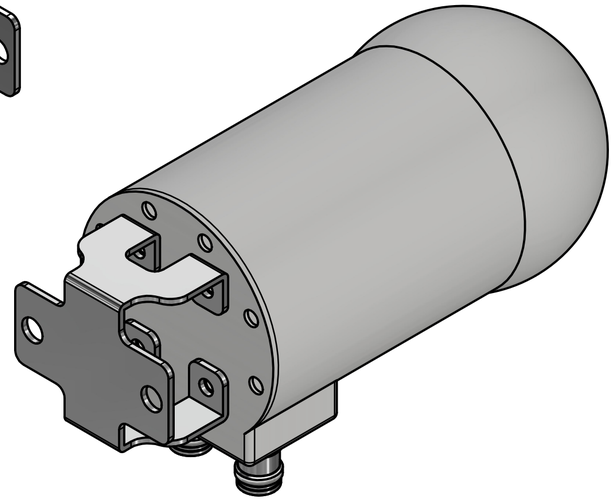

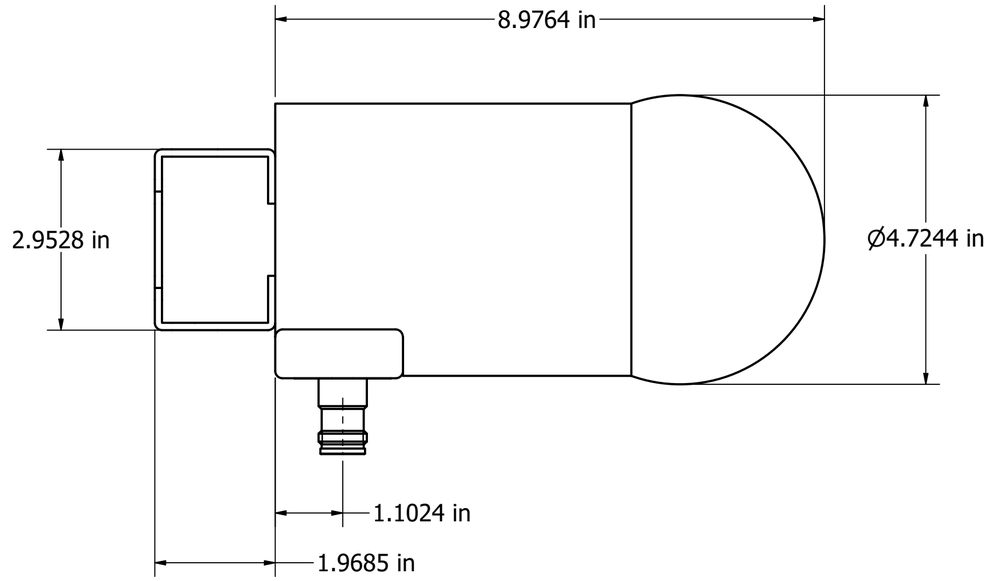

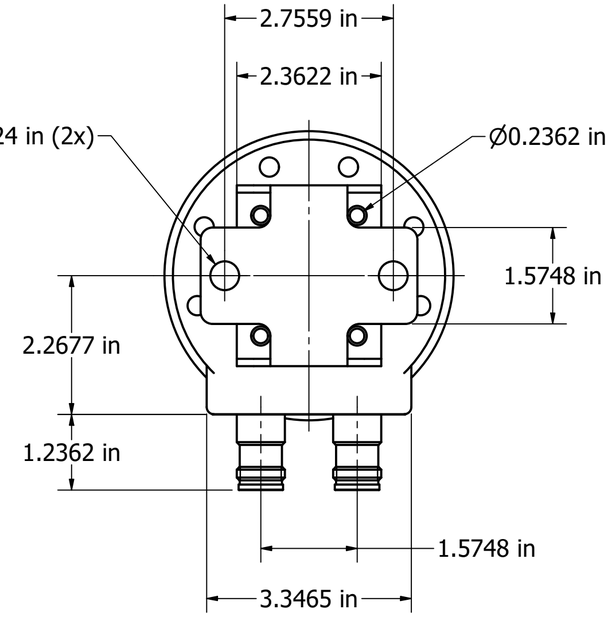

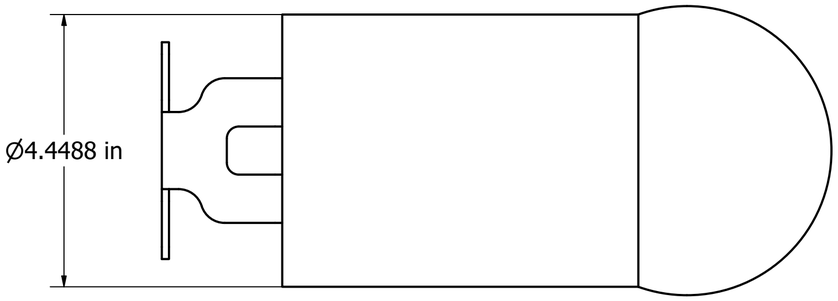

Designed by	Drawing by	Date	Approved by	Date	Quantity	Material
PAVEL	LAWRENCE	26/7/2022	PAVEL	26/7/2022		

MATSING® LENS TECHNOLOGY ENABLED

MS-SB23-LAA

MS-SB23-LAA (in)

Revision	Sheet
1.0	1 / 1