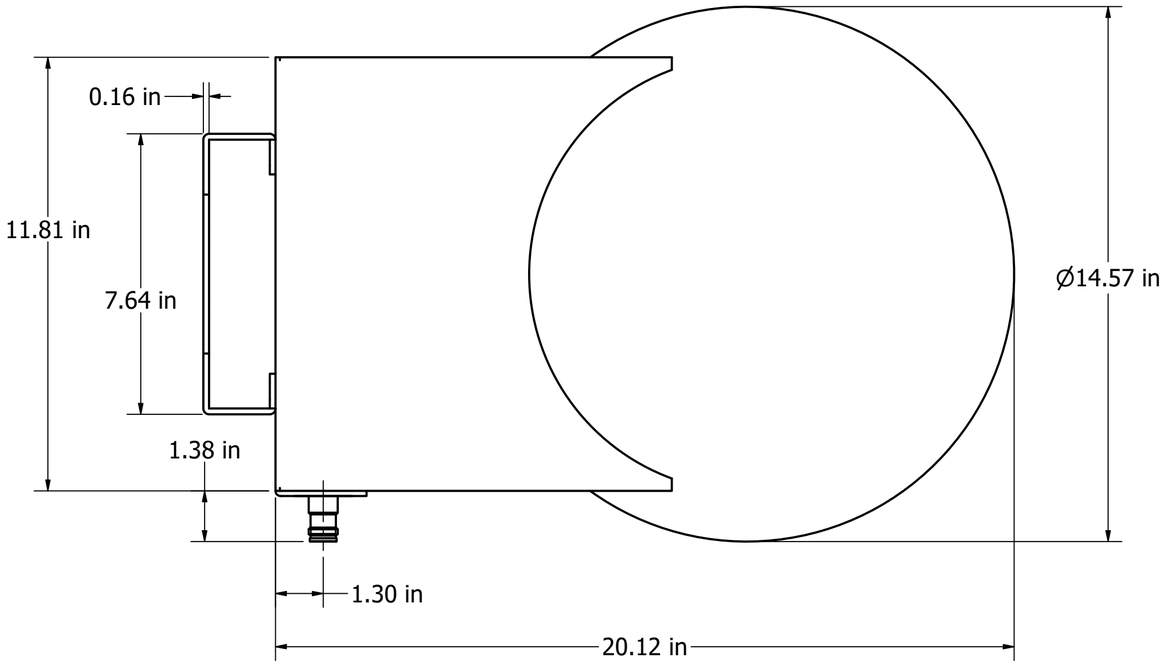

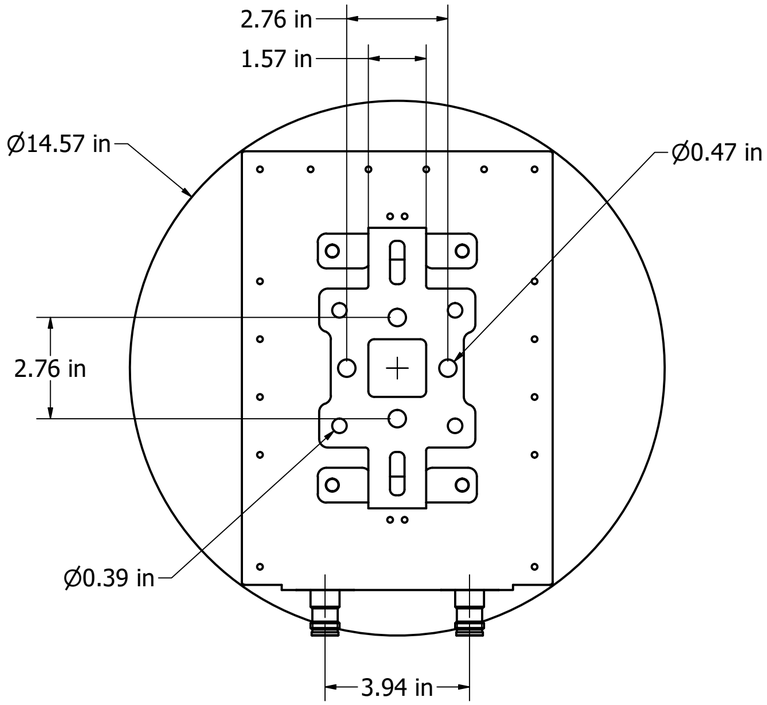

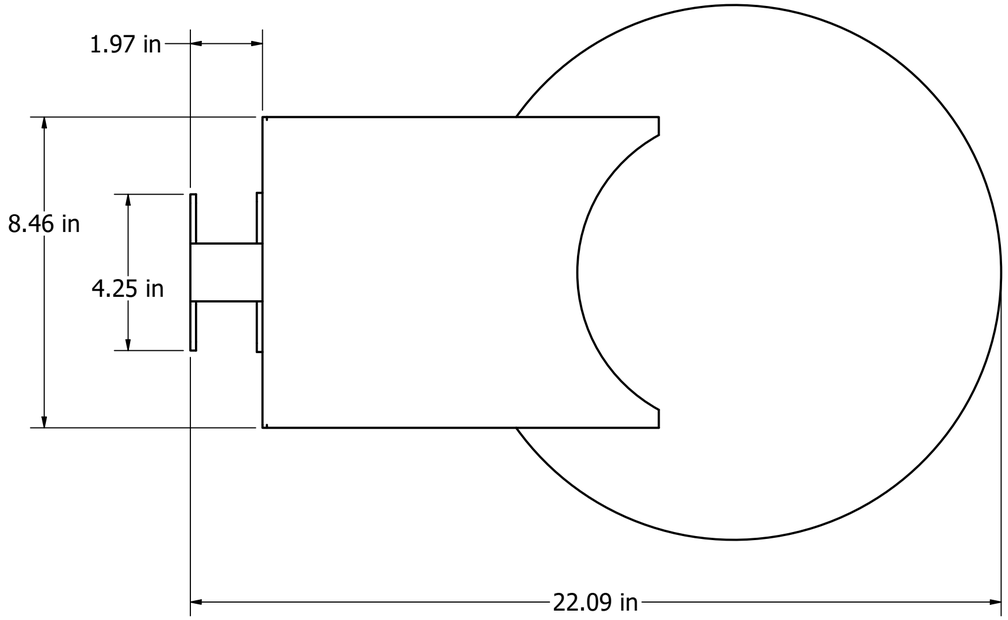

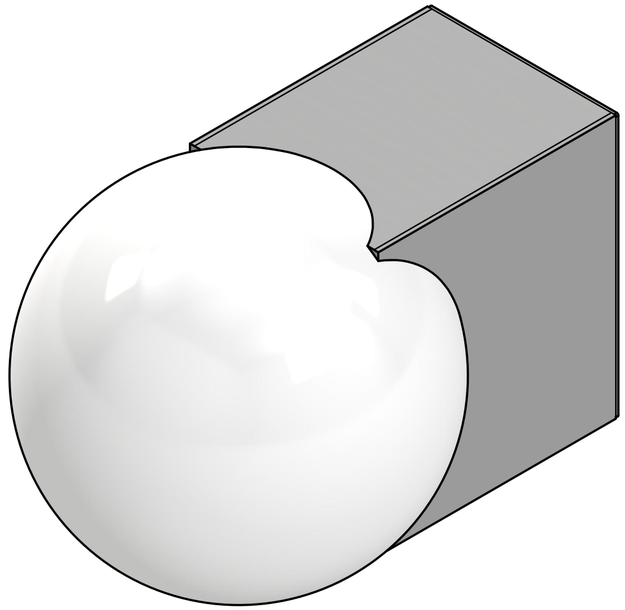

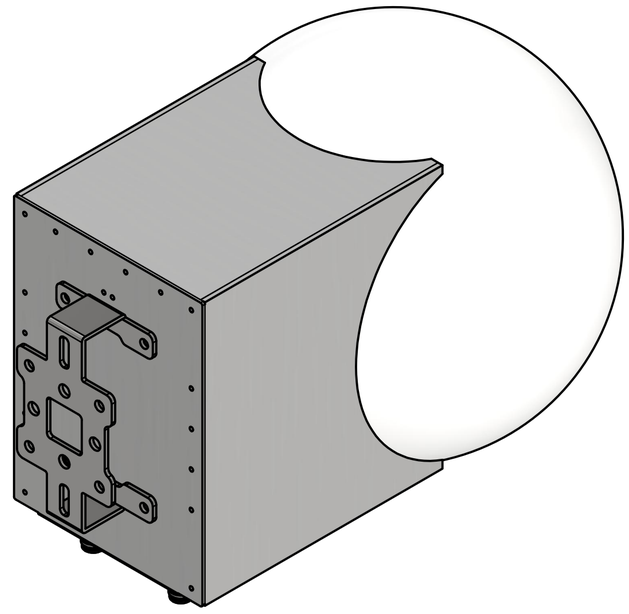

Designed by	Drawing by	Date	Approved by	Date	Quantity	Material
VIGNESH	LAWRENCE	29/10/2026	PAVEL	29/10/2026		

MATSING® LENS TECHNOLOGY ENABLED

MS-SB22-37-H

MS-SB22-37-H (in)

Revision	Sheet
1.0	1 / 1