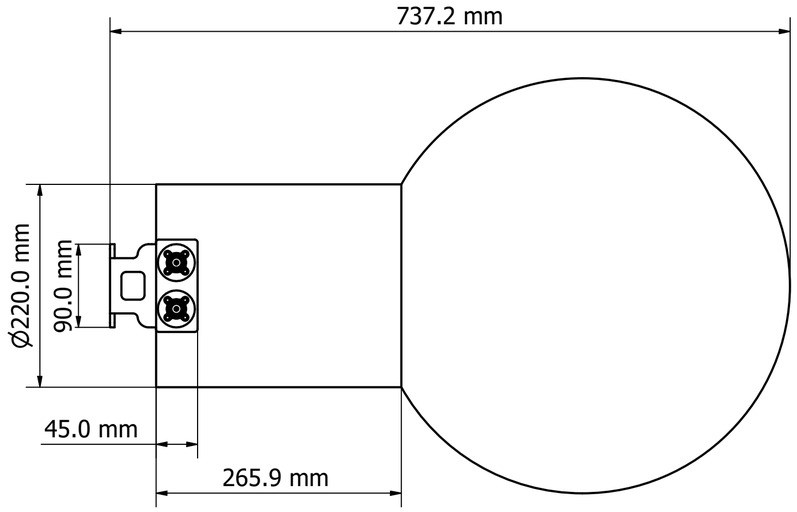

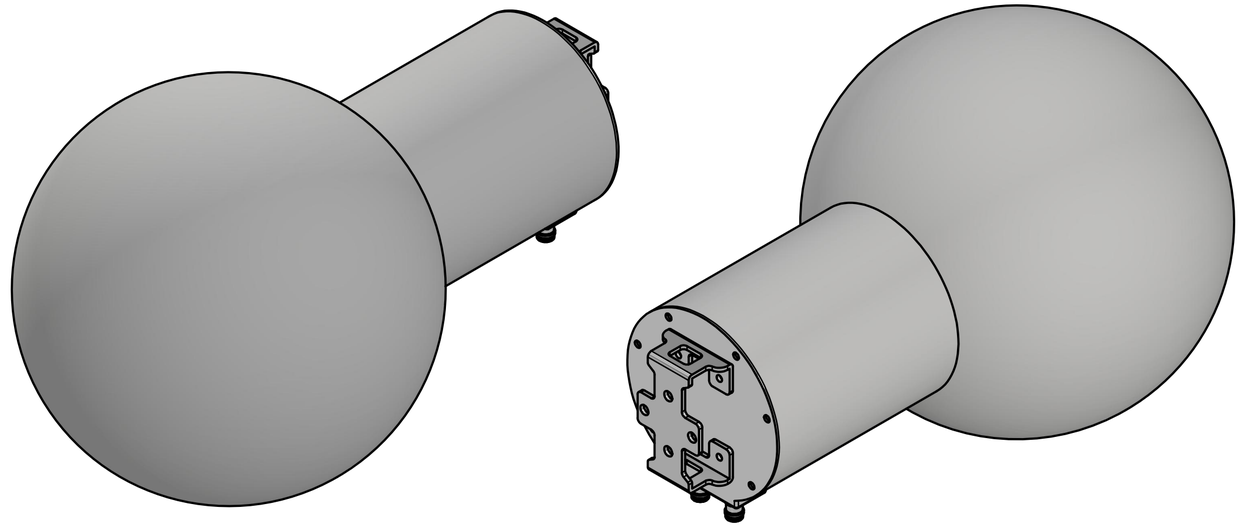

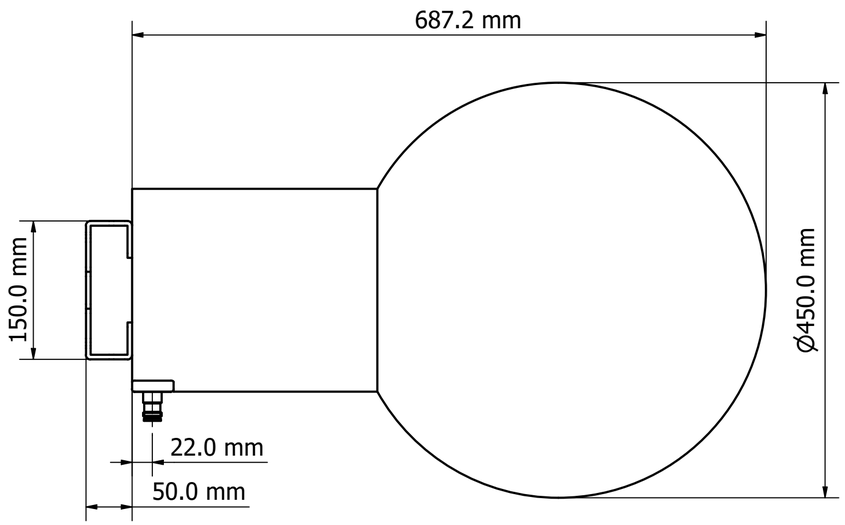

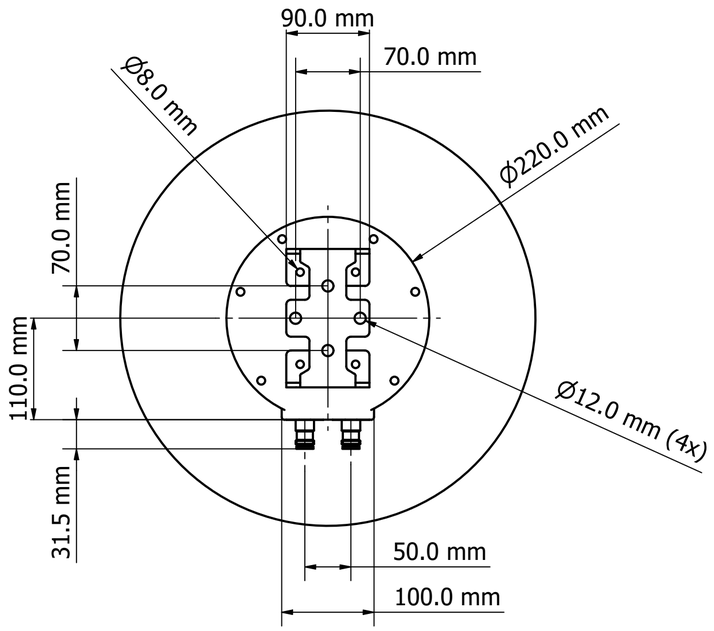

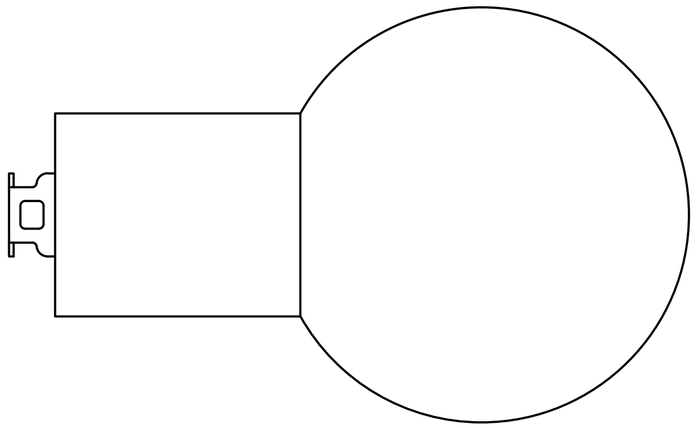

Designed by	Drawing by	Date	Approved by	Date	Quantity	Material
VIGNESH	LAWRENCE	1/7/2026	PAVEL	1/7/2026		

MATSING® LENS TECHNOLOGY ENABLED

MS-SB19-EHF

MS-SB19-EHF (mm)

Revision 1.0

Sheet 1 / 1