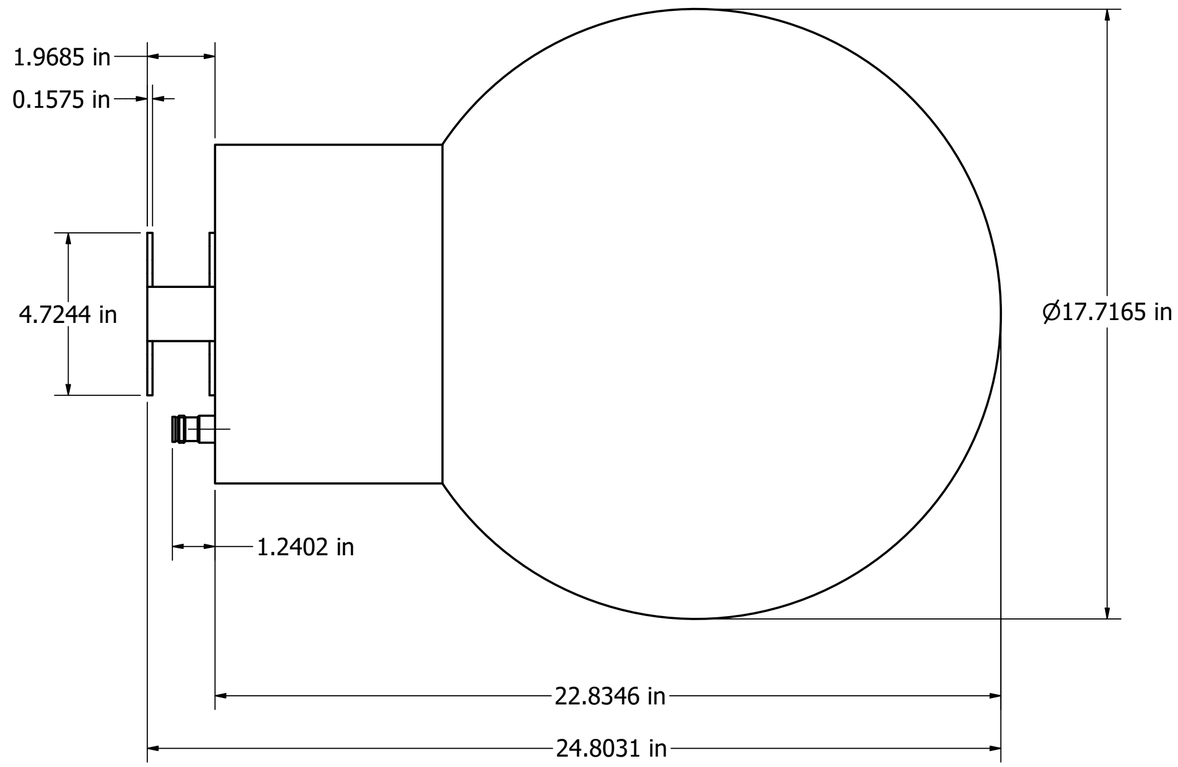

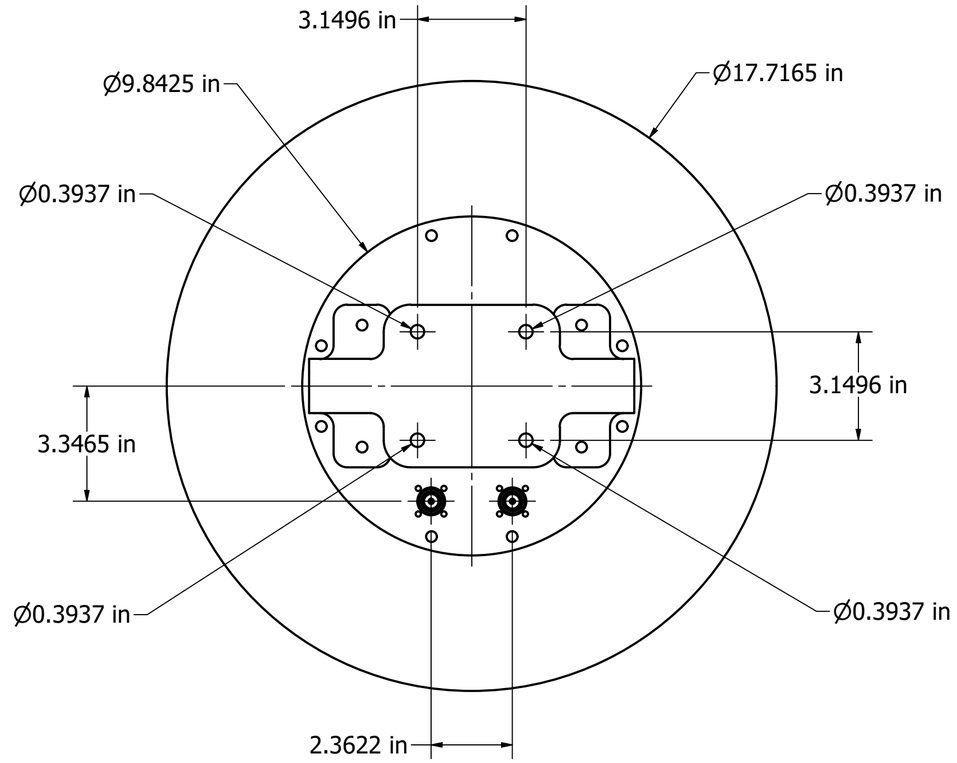

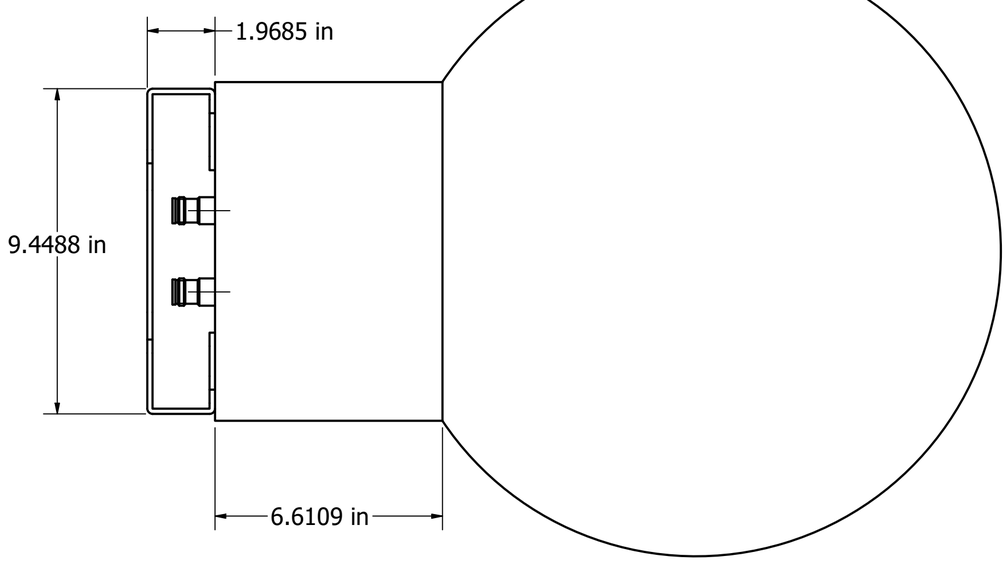

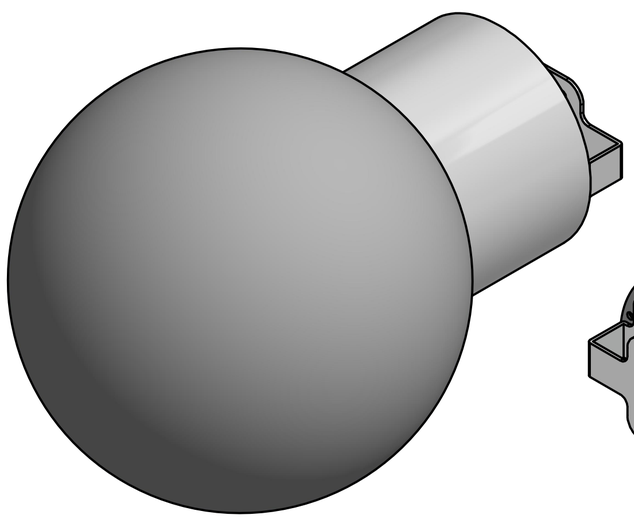

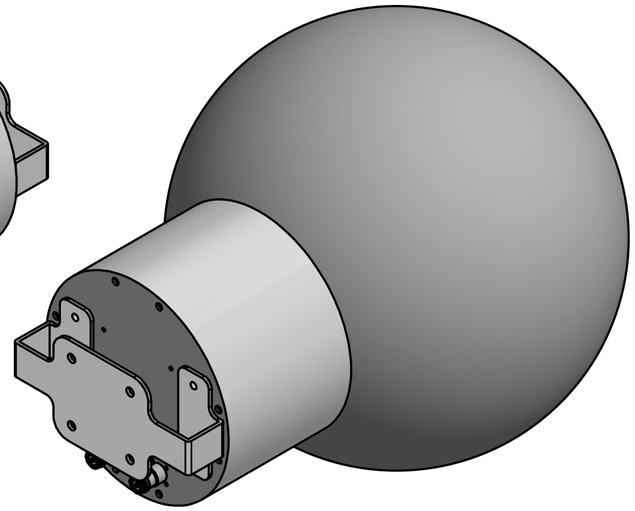

Designed by	Drawing by	Date	Approved by	Date	Quantity	Material
PAVEL	LAWRENCE	21/12/2020	PAVEL	21/12/2020		

MATSING® LENS TECHNOLOGY ENABLED

MS-SB17-H

MS-SB17-H (in)

Revision	Sheet
1.0	1 / 1