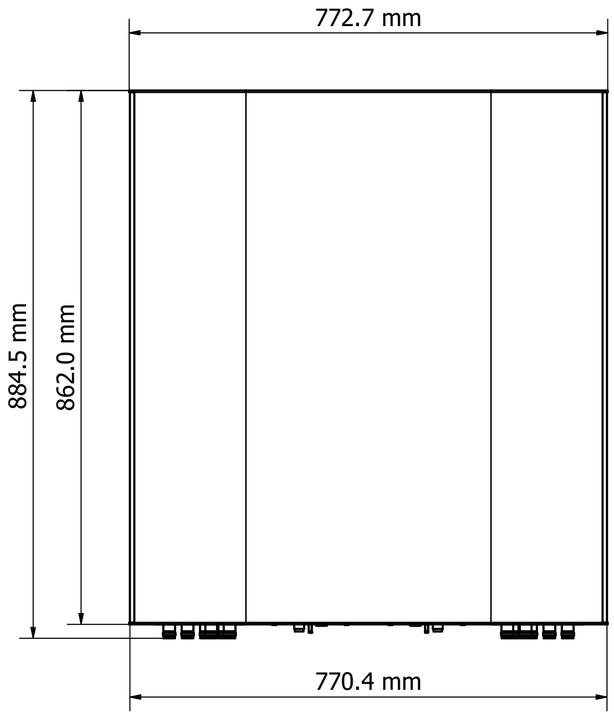

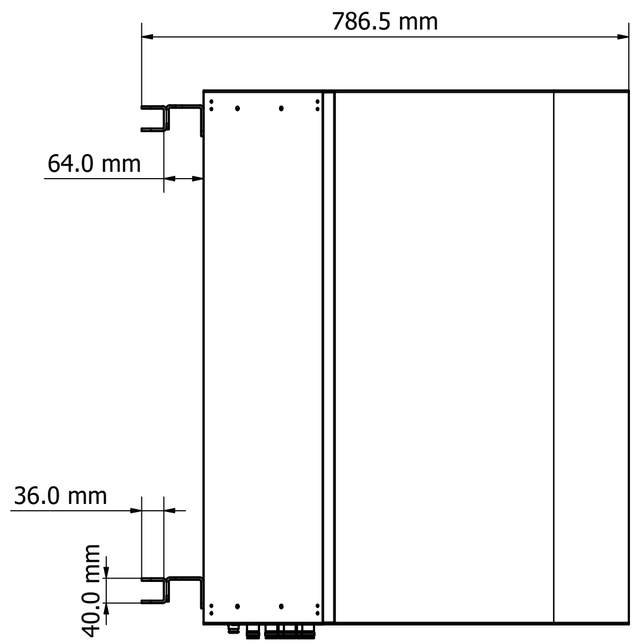

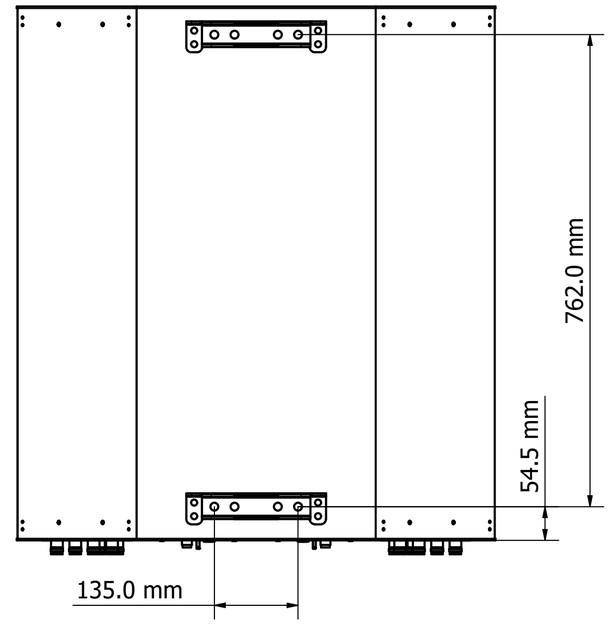

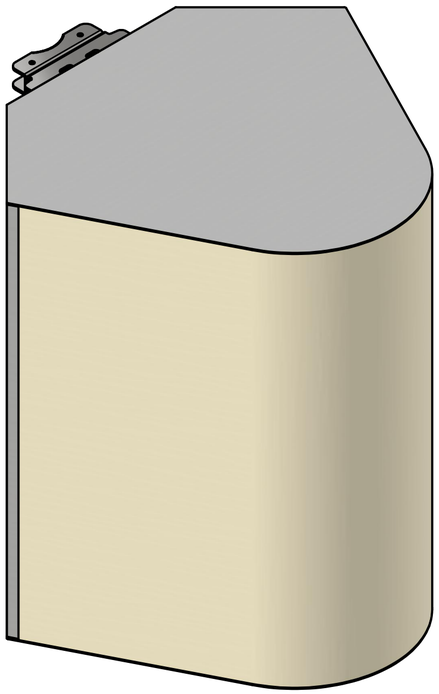

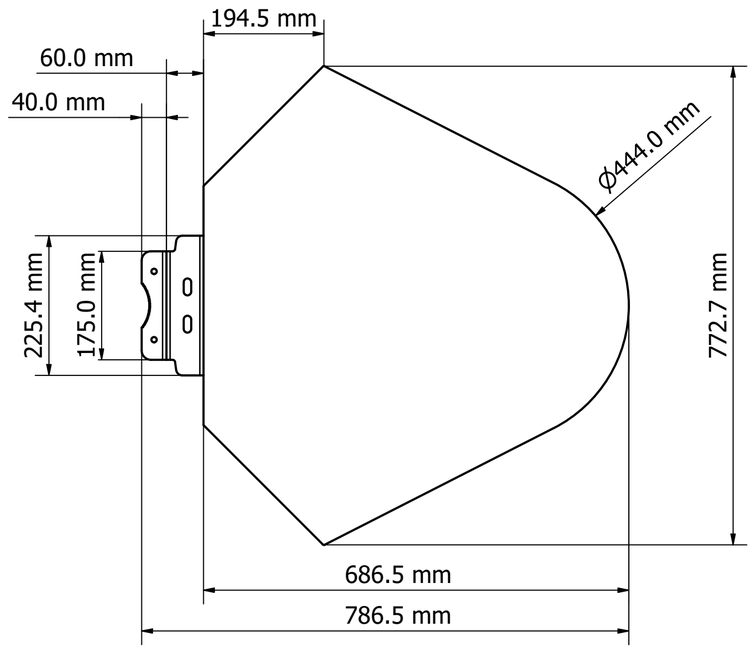

Designed by	Drawing by	Date	Approved by	Date	Quantity	Material
VIGNESH	LAWRENCE	26/10/2026	PAVEL	27/10/2026		

MATSING® LENS TECHNOLOGY ENABLED

MS-MBC-4.2-H2-12-L2-20

MS-MBC-4.2-H2-12-L2-20 (mm) | Revision 1.0 | Sheet 1 / 3

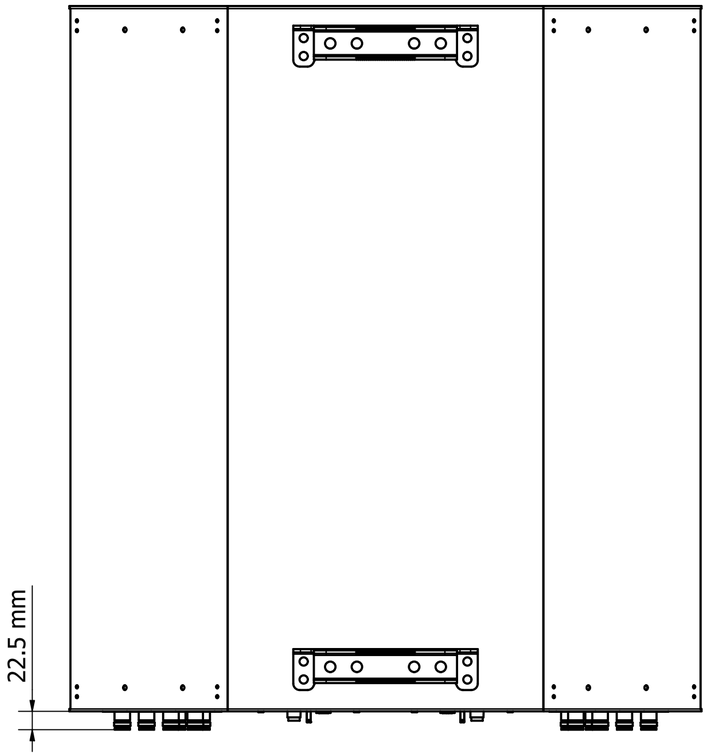

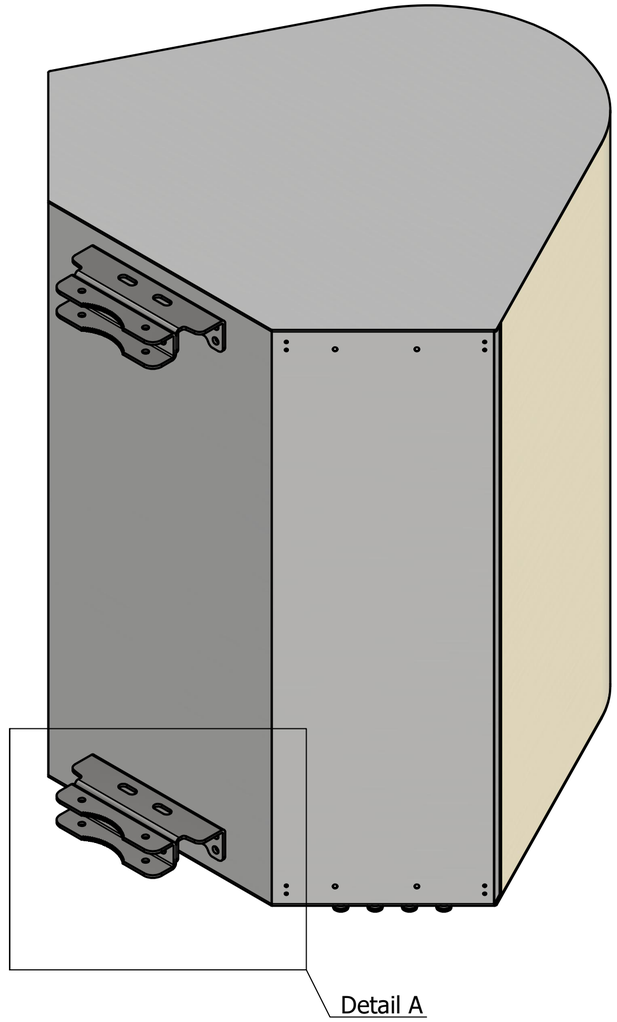

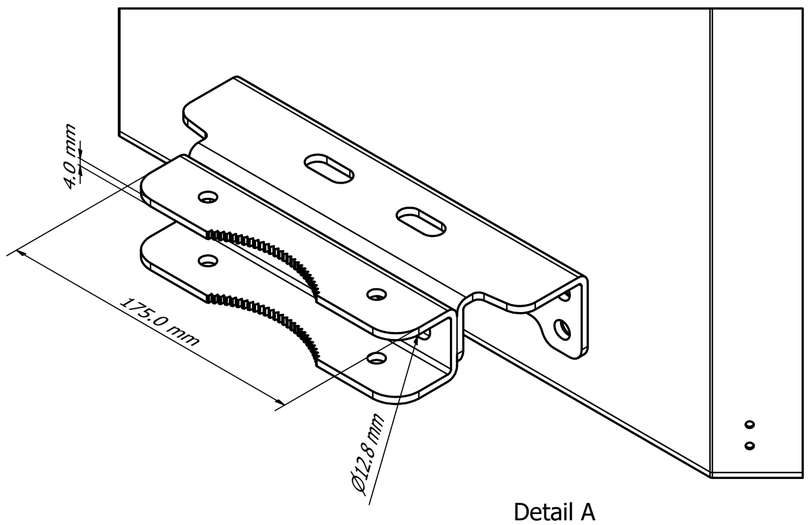

Detail A

Designed by	Drawing by	Date	Approved by	Date	Quantity	Material
VIGNESH	LAWRENCE	26/10/2026	PAVEL	27/10/2026		

MATSING® LENS TECHNOLOGY ENABLED

MS-MBC-4.2-H2-12-L2-20

MS-MBC-4.2-H2-12-L2-20 (mm) | Revision 1.0 | Sheet 2 / 3

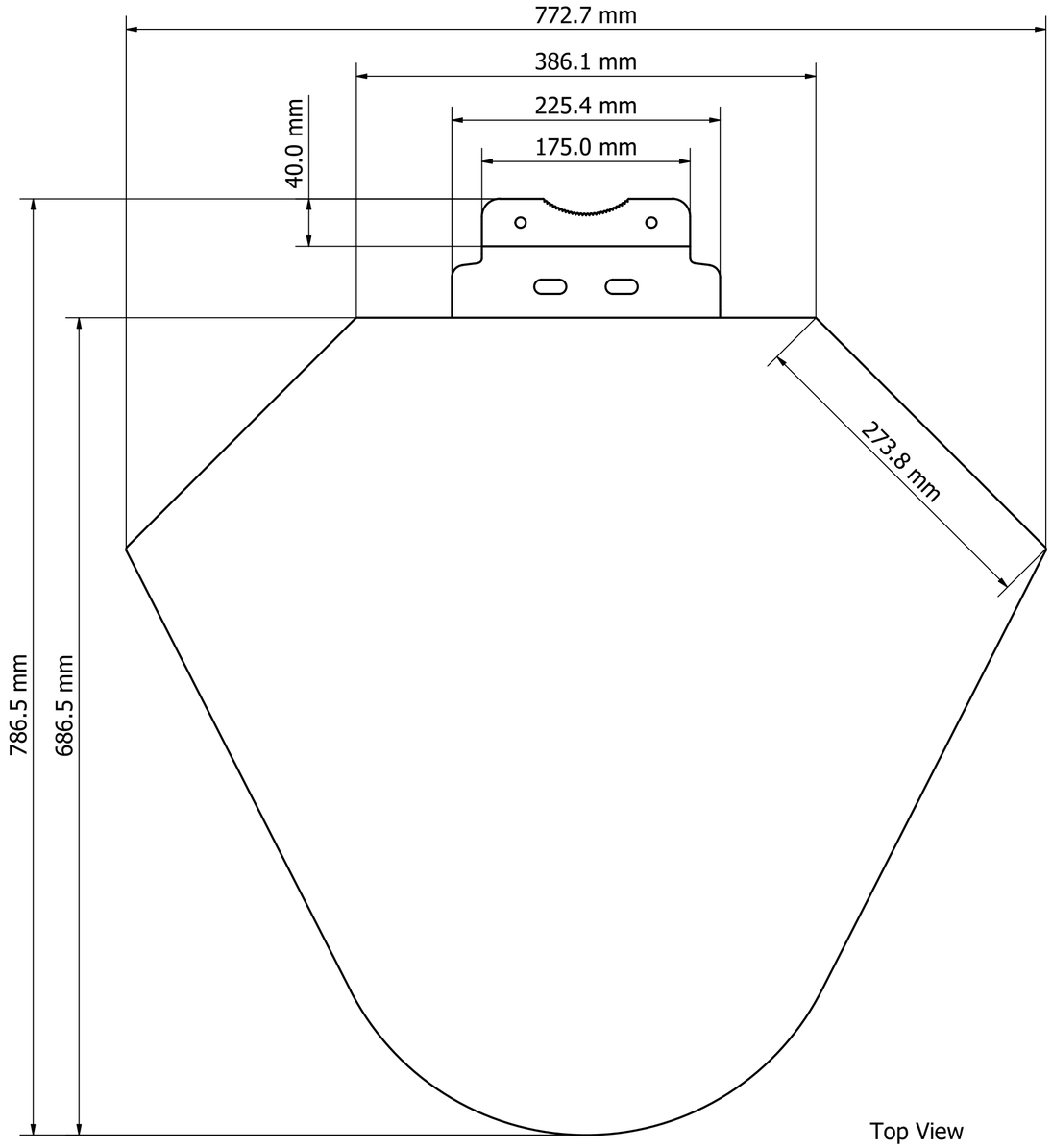

Top View

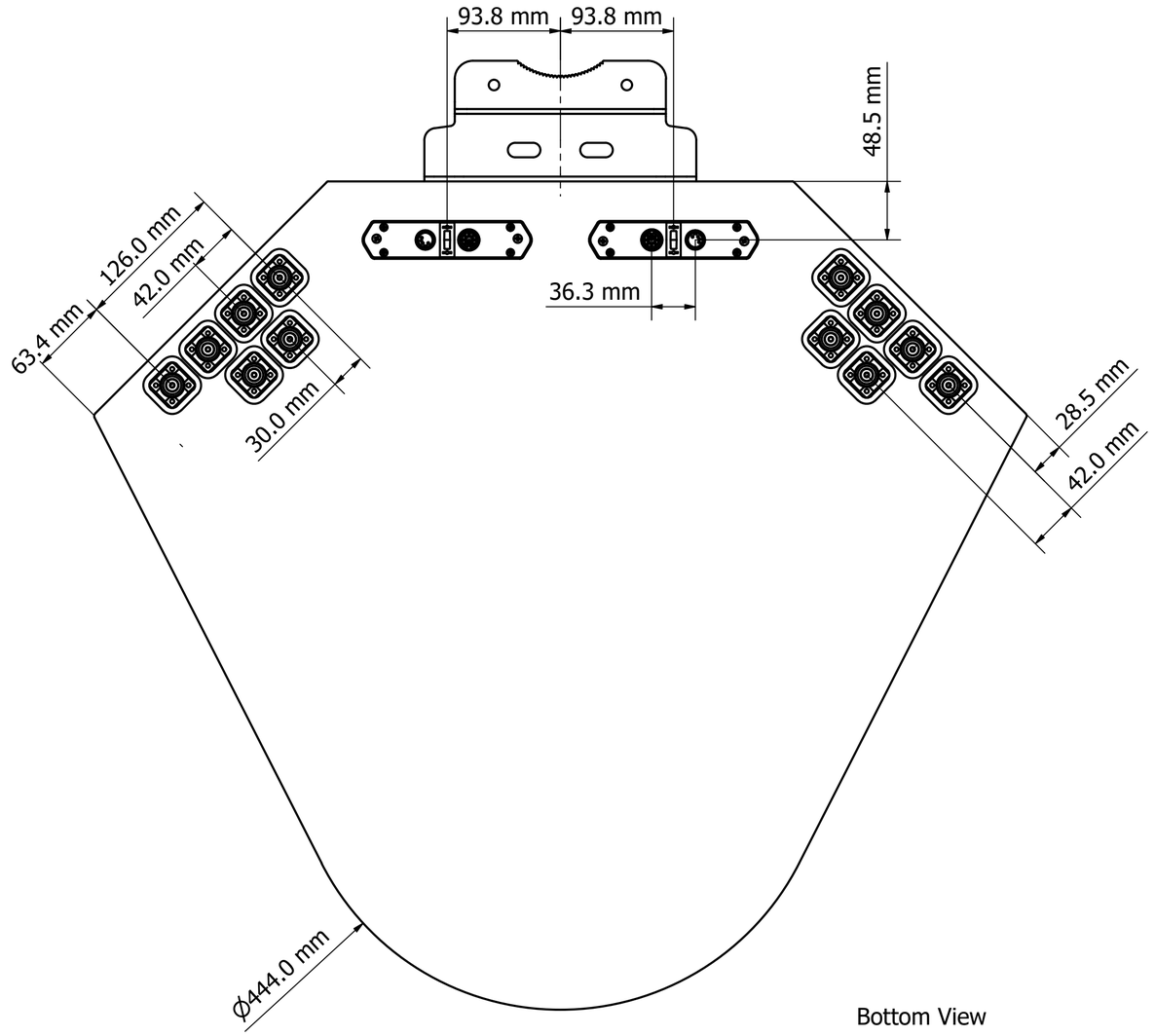

Bottom View

Designed by	Drawing by	Date	Approved by	Date	Quantity	Material
VIGNESH	LAWRENCE	26/10/2026	PAVEL	27/10/2026		

MATSING® LENS TECHNOLOGY ENABLED

MS-MBC-4.2-H2-12-L2-20

MS-MBC-4.2-H2-12-L2-20 (mm)	Revision	Sheet
	1.0	3 / 3