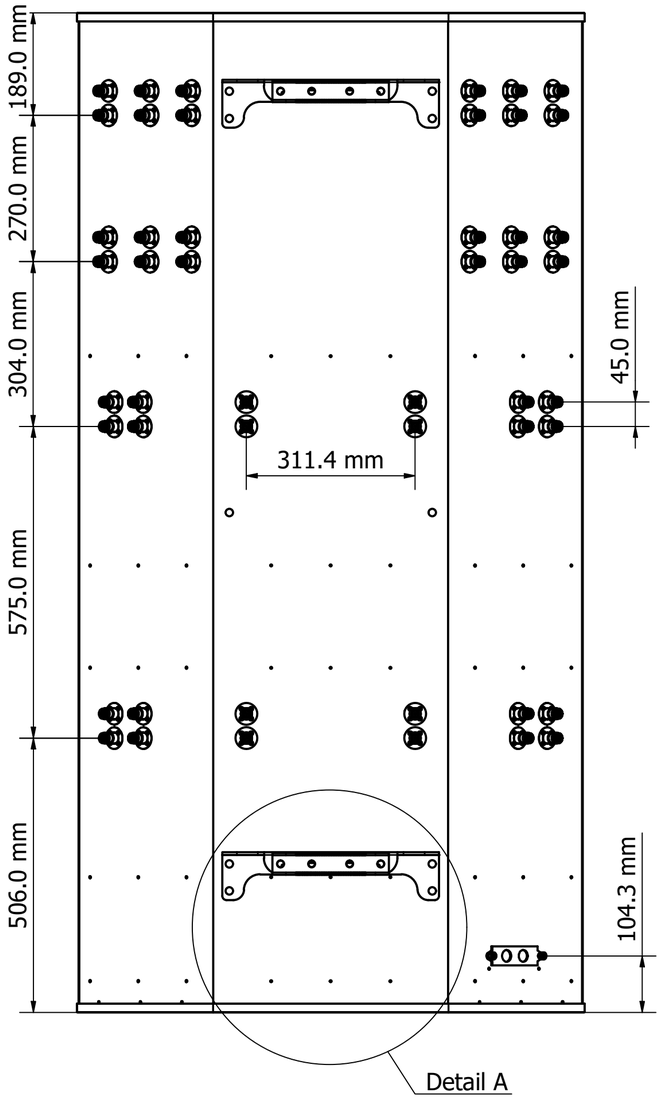

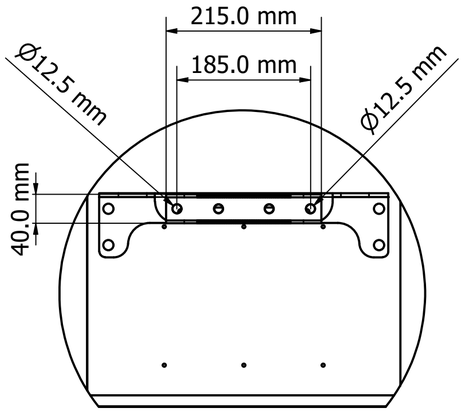

Detail A

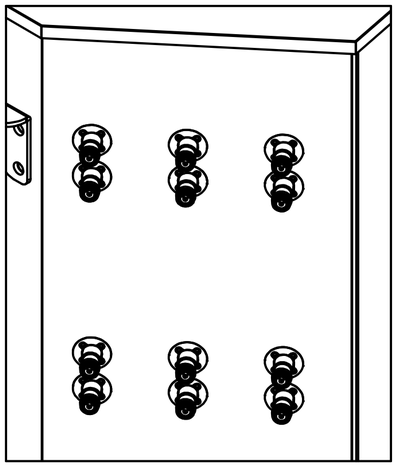

Detail C

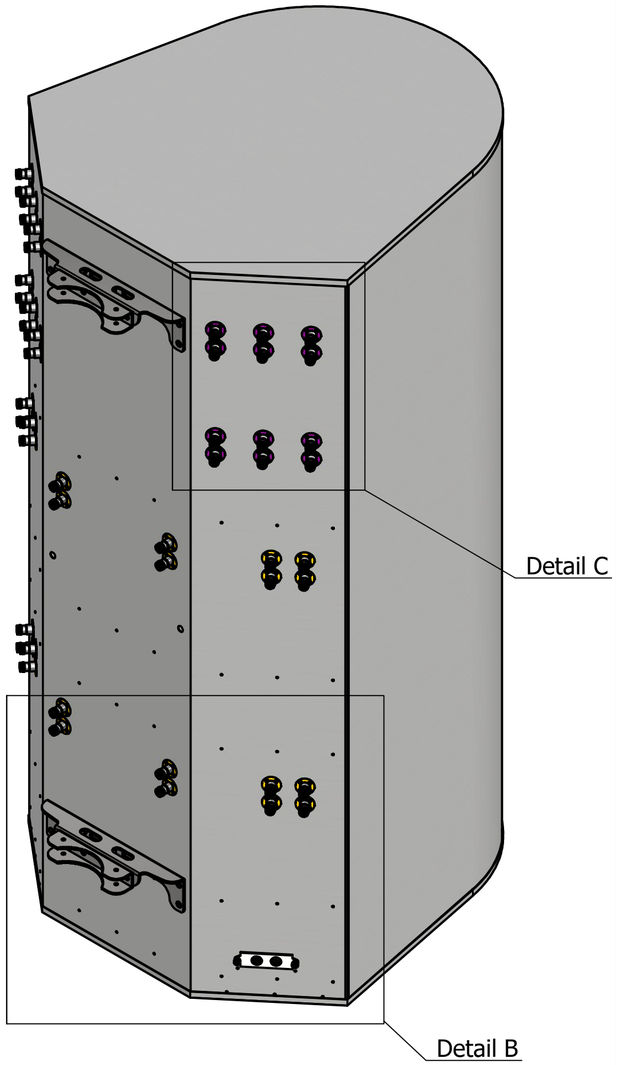

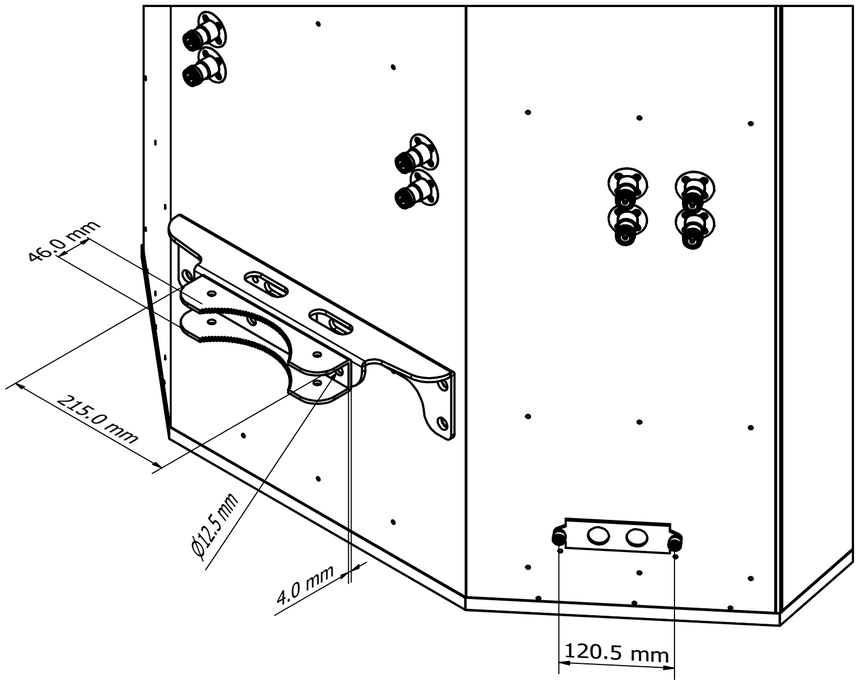

Detail B

Designed by	Drawing by	Date	Approved by	Date	Quantity	Material
VIGNESH	LAWRENCE	21/5/2024	PAVEL	21/5/2024		

MATSING® LENS TECHNOLOGY ENABLED

MS-MBA-6.6-C4-H4

MS-MBA-6.6-C4-H4 (mm)

Revision 1.0

Sheet 2 / 3