MS-MBA-4.4-SH2-SH2-45M

REAR VIEW CONNECTOR LAYOUT

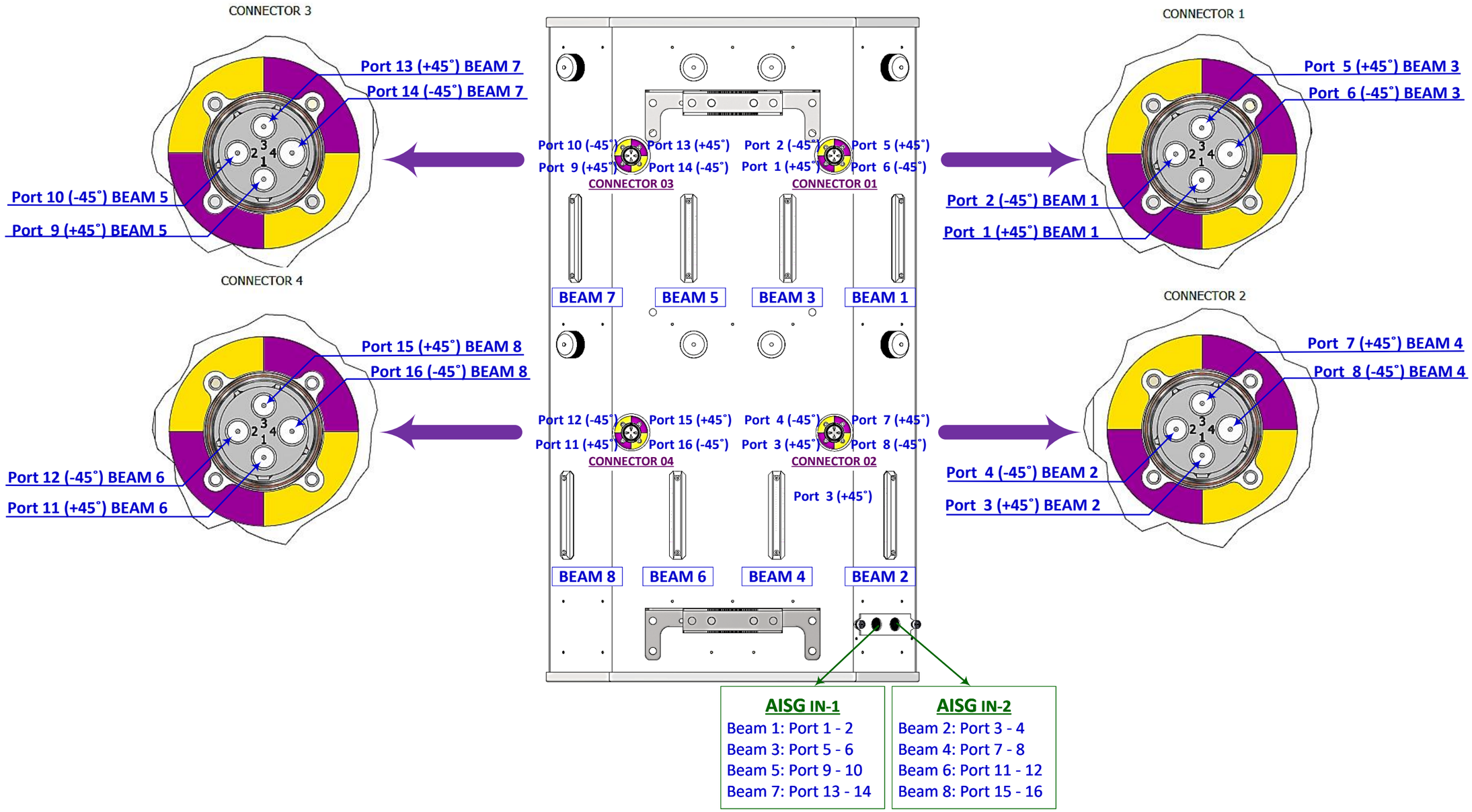

MATSING® LENS TECHNOLOGY ENABLED

LTE® LENS TECHNOLOGY ENABLED

Date	Prepared by	Approved by	Document nos.	Revision		
01 Sep 2022	Ray Ling	Pavel	MBA-44-SH2-45M-CL-001	2	Antenna Connector Layout	MS-MBA-4.4-SH2-SH2-45M