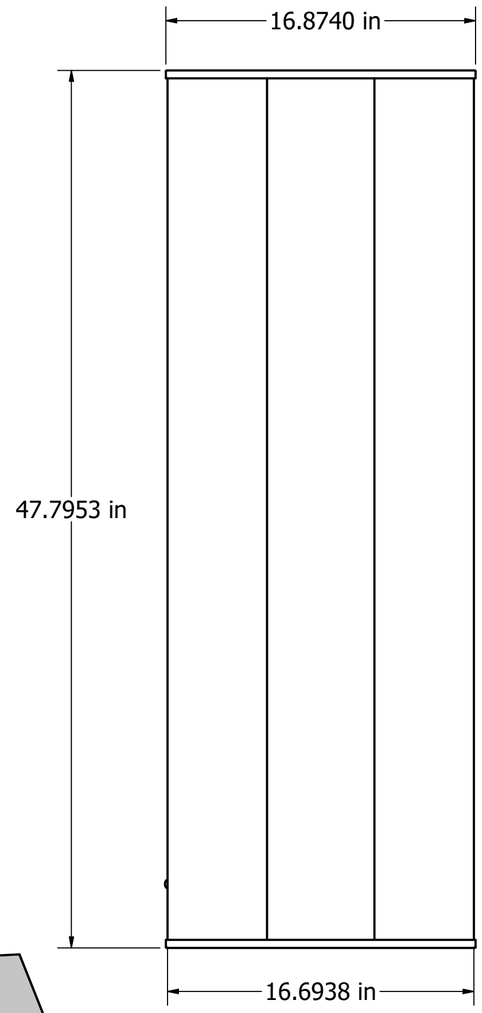

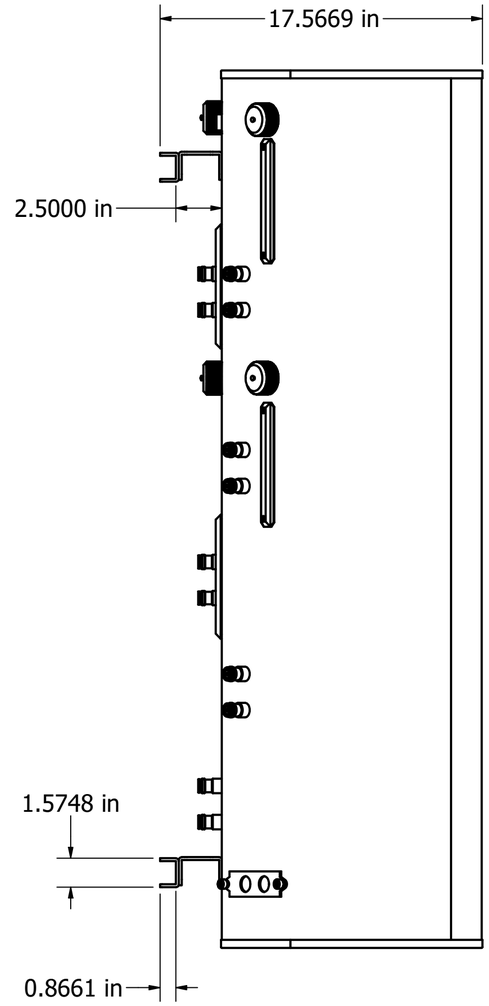

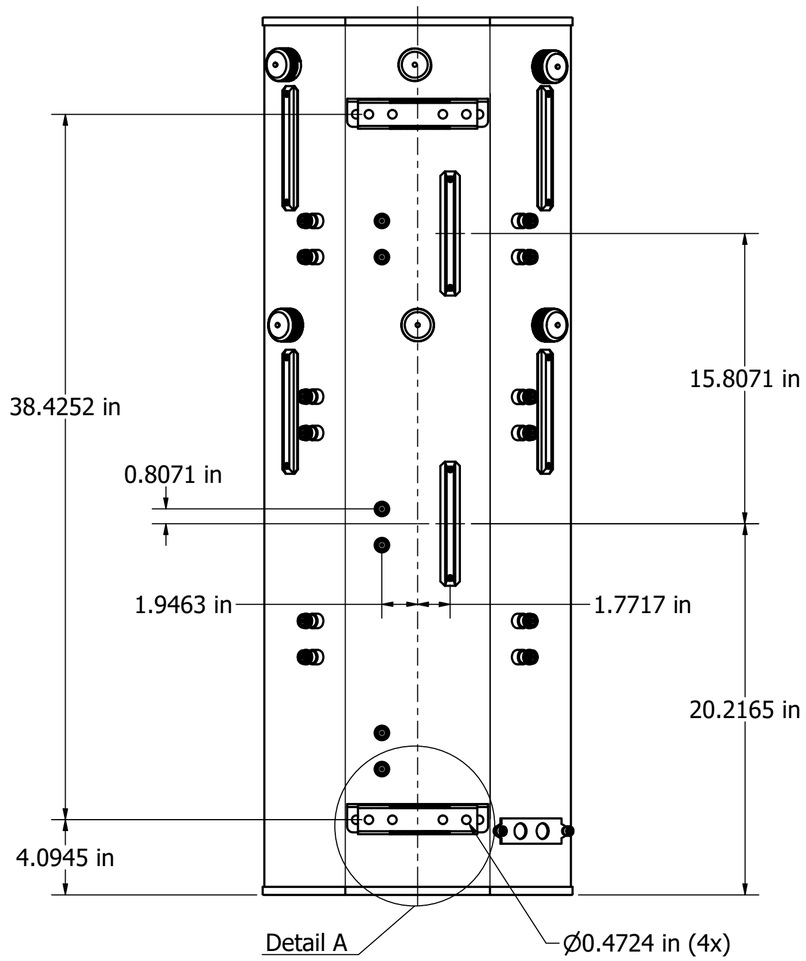

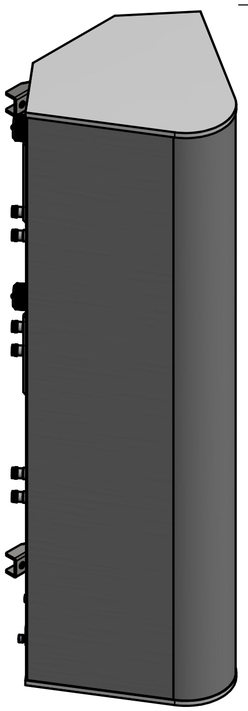

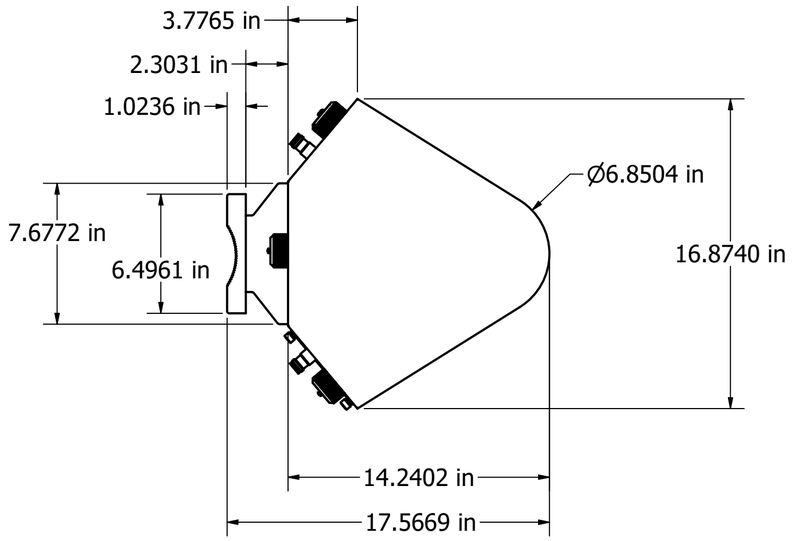

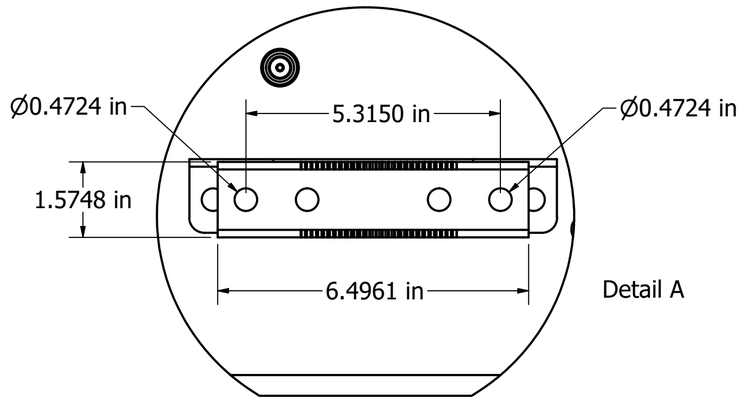

Designed by	Drawing by	Date	Approved by	Date	Quantity	Material
ALEXANDRE	LAWRENCE	9/28/2020	PAVEL	10/1/2020		

MATSING® LENS TECHNOLOGY ENABLED

MS-MBA-3.3-LAA2-F4

MS-MBA-3.3-LAA2-F4 (in)

Revision 2.0

Sheet 1 / 3

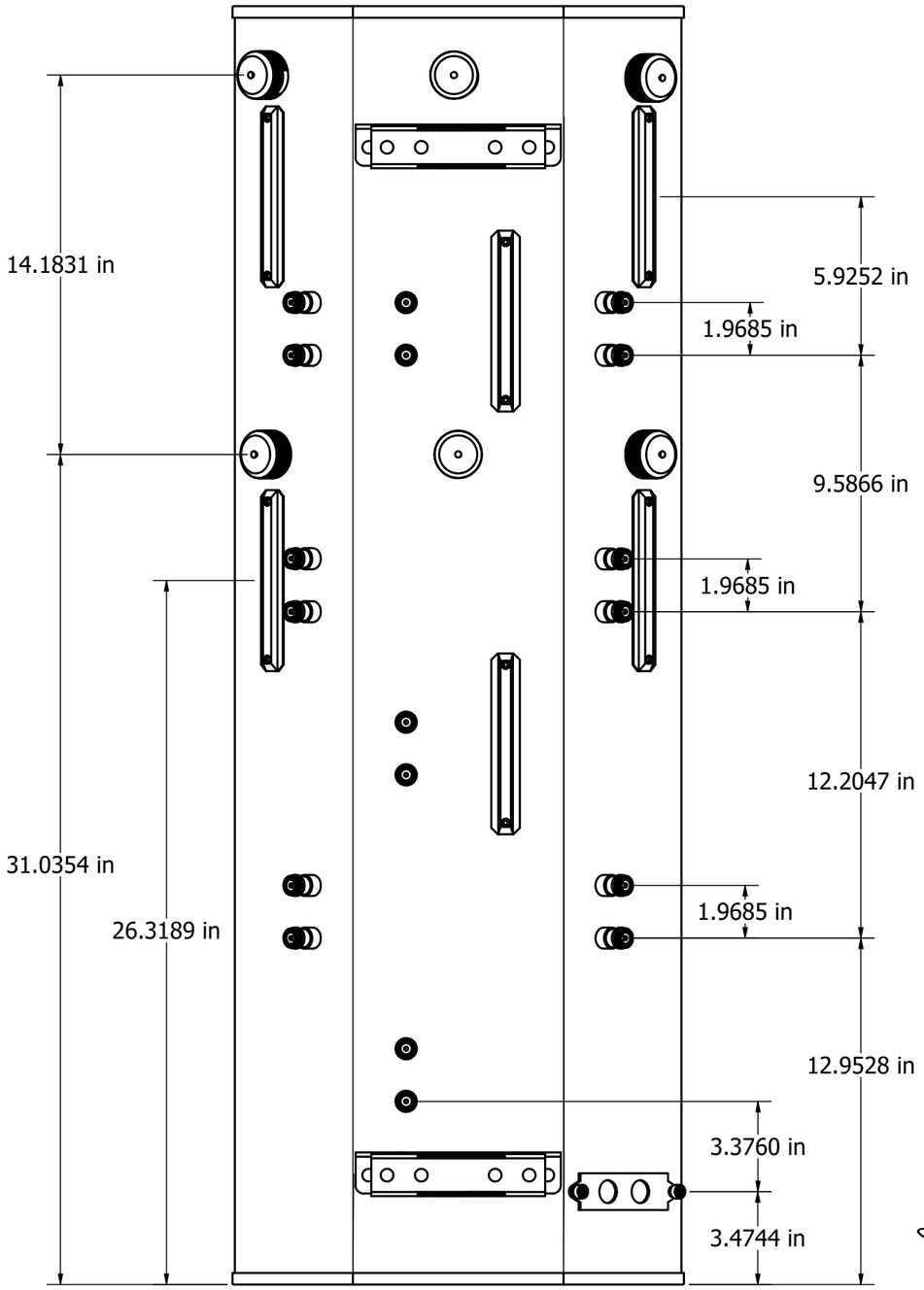

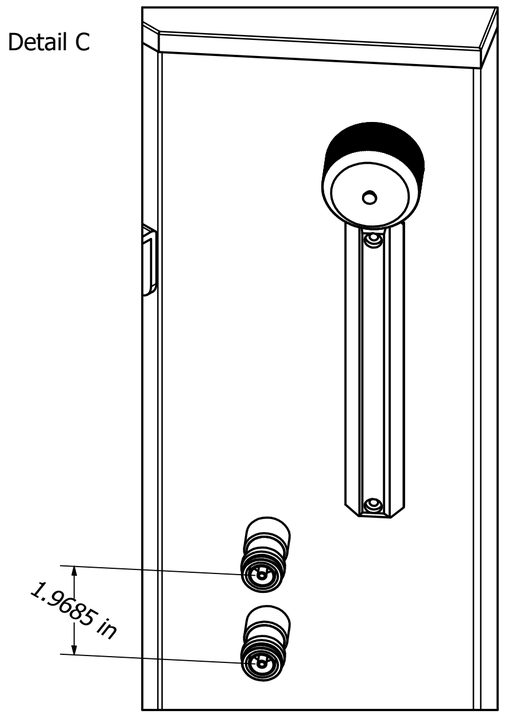

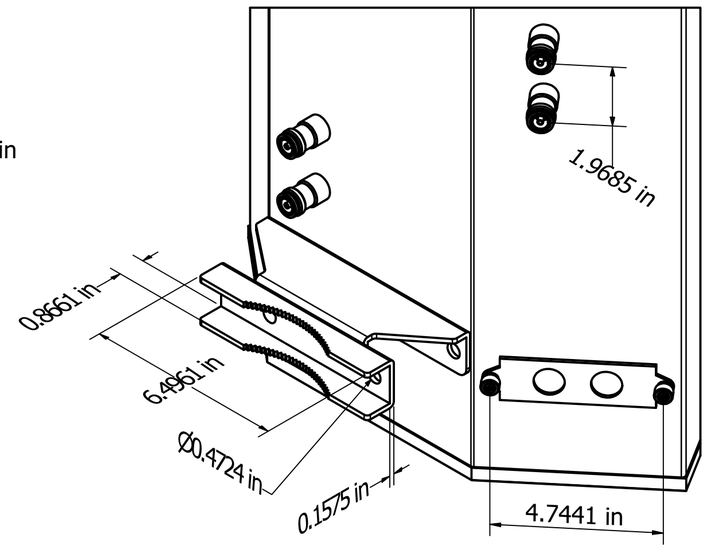

Detail B

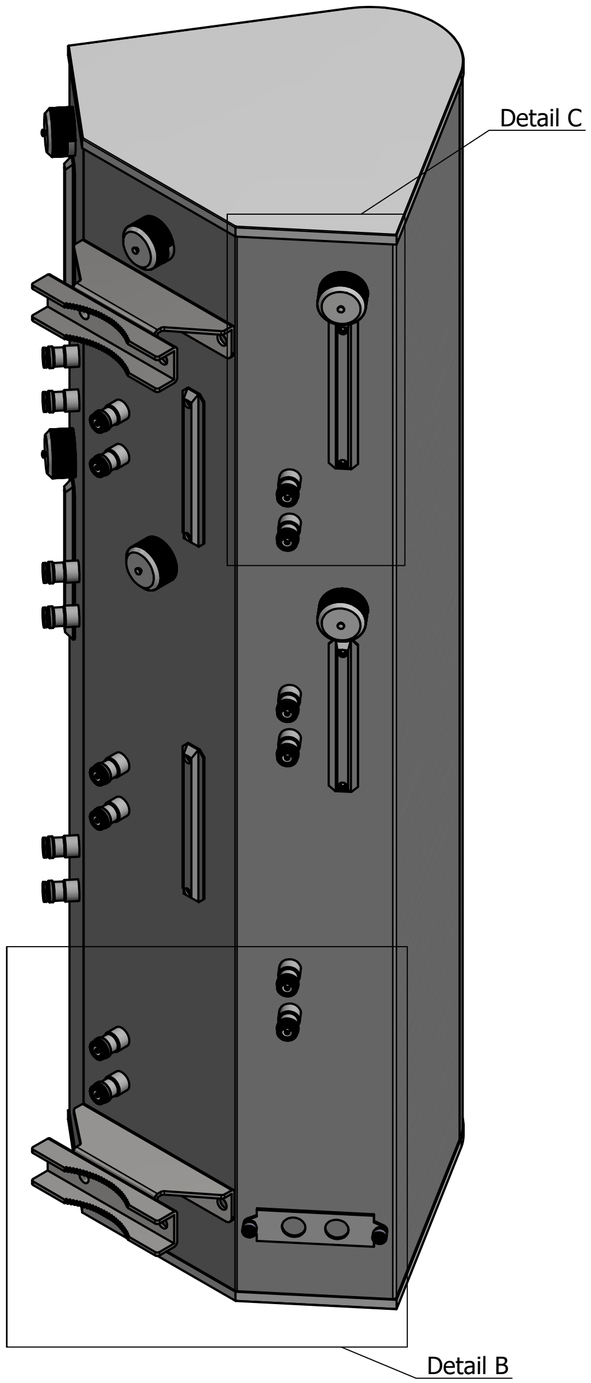

Designed by	Drawing by	Date	Approved by	Date	Quantity	Material
ALEXANDRE	LAWRENCE	9/28/2020	PAVEL	10/1/2020		

MATSING® LENS TECHNOLOGY ENABLED

MS-MBA-3.3-LAA2-F4

MS-MBA-3.3-LAA2-F4 (in) | Revision 2.0 | Sheet 2 / 3

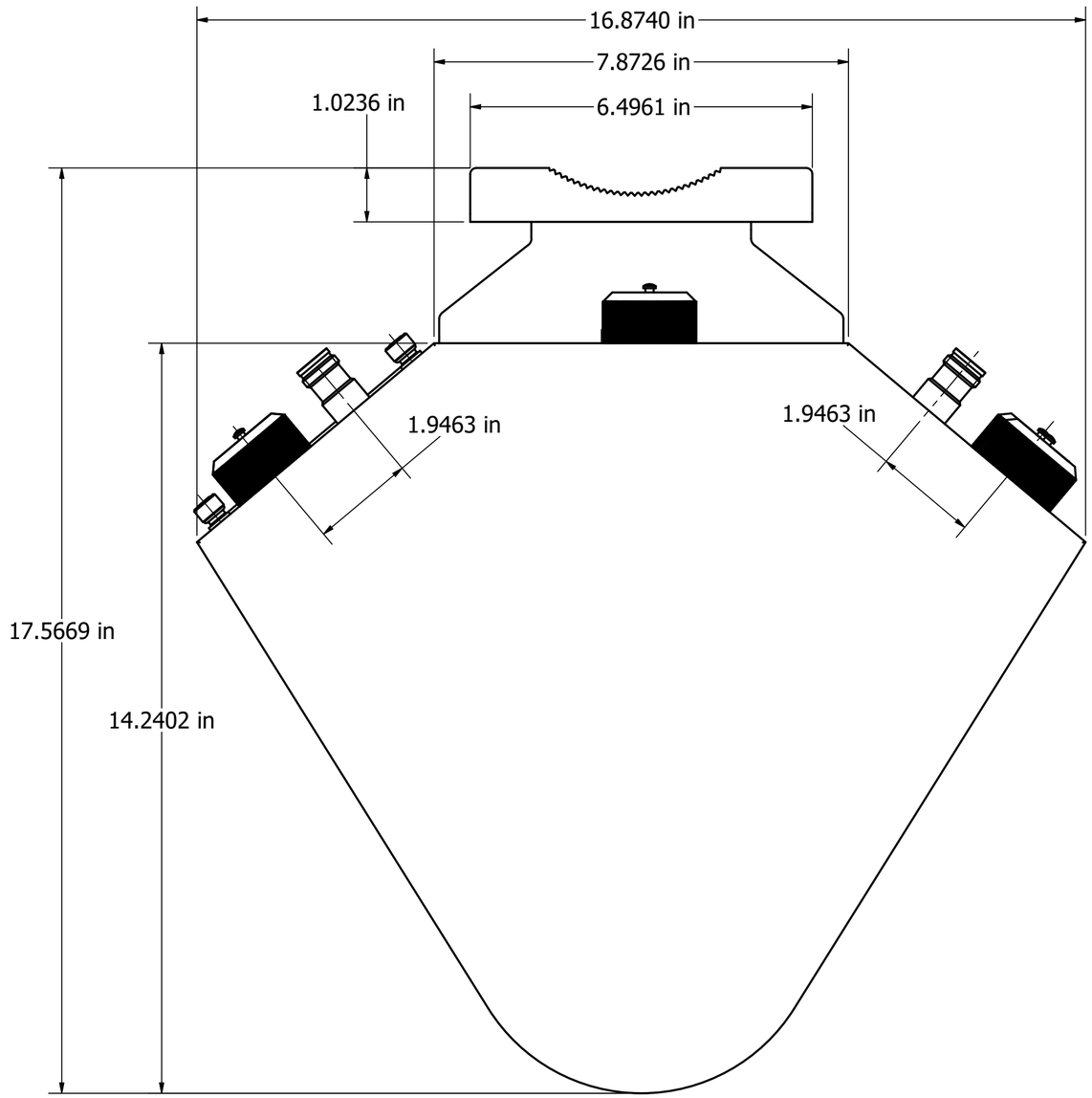

Top View

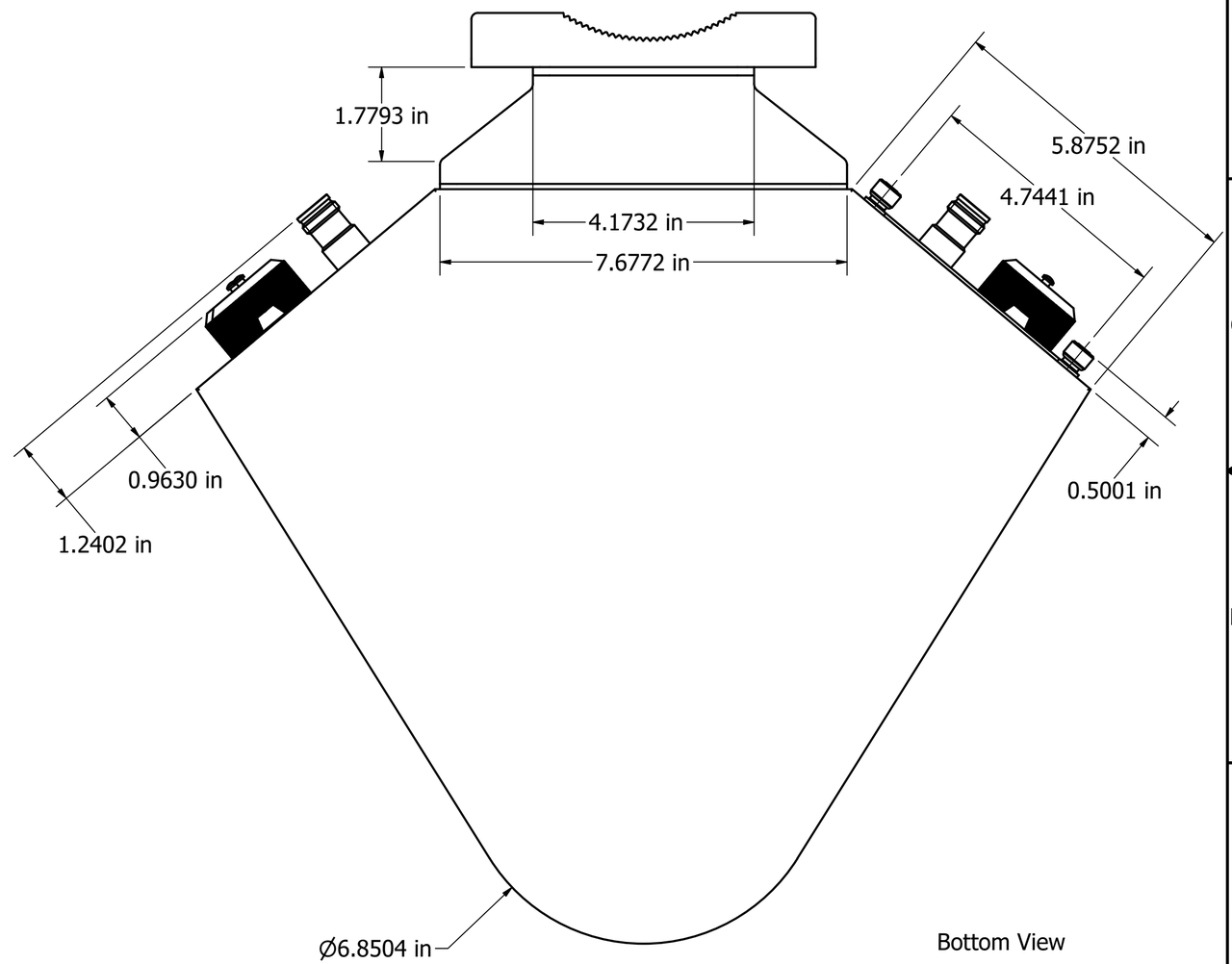

Bottom View

Designed by	Drawing by	Date	Approved by	Date	Quantity	Material
ALEXANDRE	LAWRENCE	9/28/2020	PAVEL	10/1/2020		

MATSING® LENS TECHNOLOGY ENABLED

MS-MBA-3.3-LAA2-F4

MS-MBA-3.3-LAA2-F4 (in)

Revision 2.0

Sheet 3 / 3