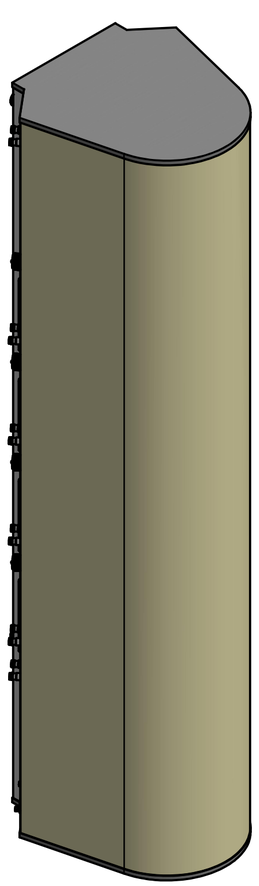

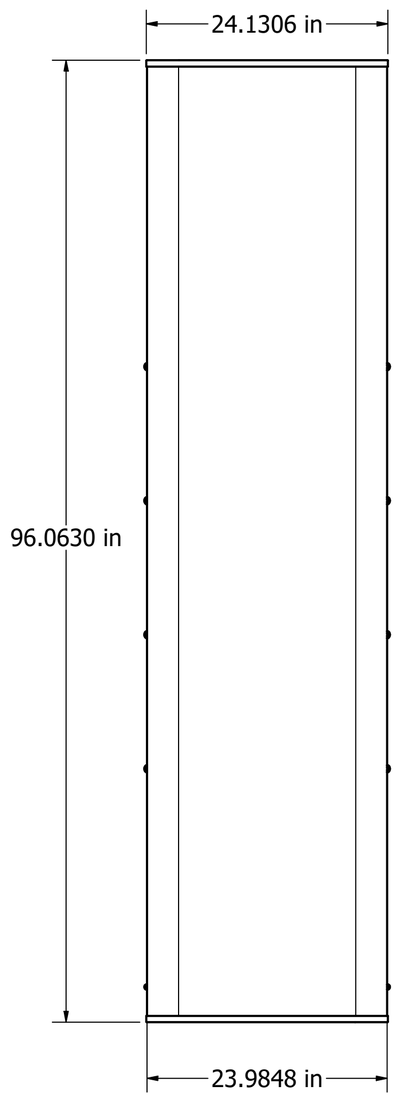

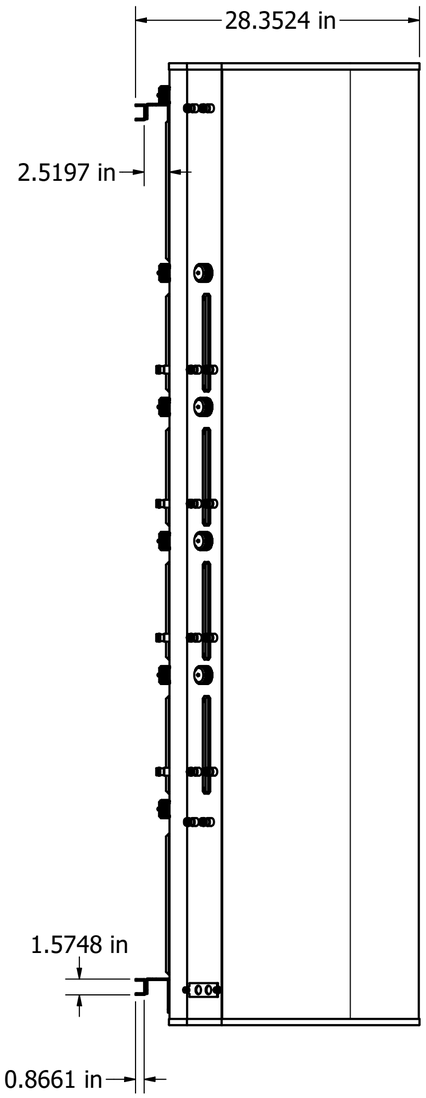

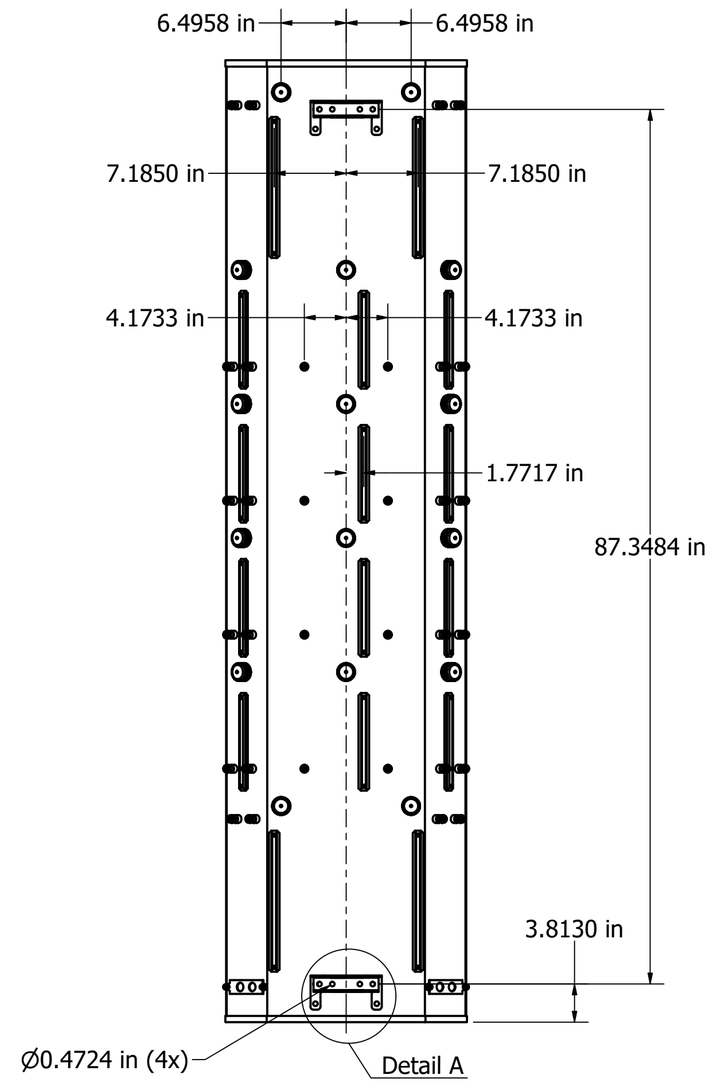

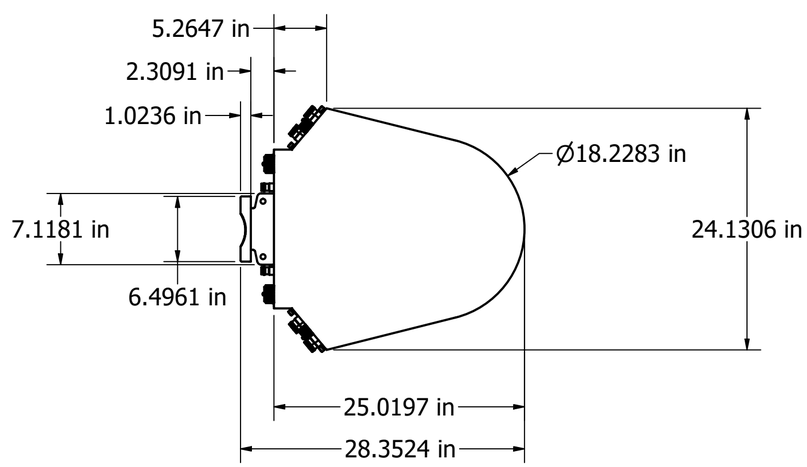

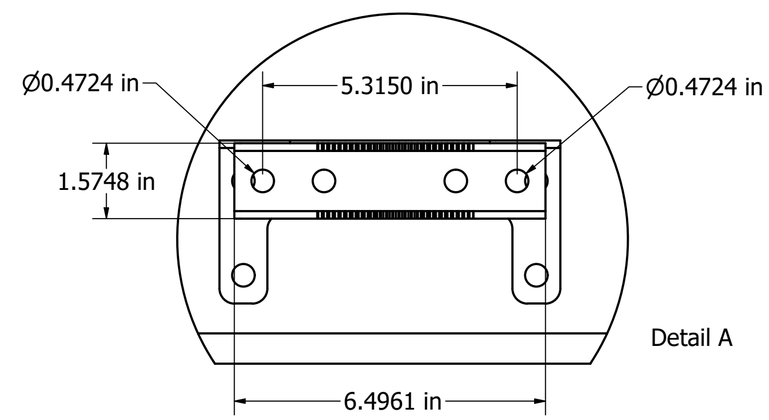

Designed by	Drawing by	Date	Approved by	Date	Quantity	Material
ALEXANDRE	LAWRENCE	14/8/2020	PAVEL	17/8/2020		

MATSING® LENS TECHNOLOGY ENABLED

MS-MBA-3.2-H8-L4

MS-MBA-3.2-H8-L4 (in)

Revision 1.0

Sheet 1 / 3

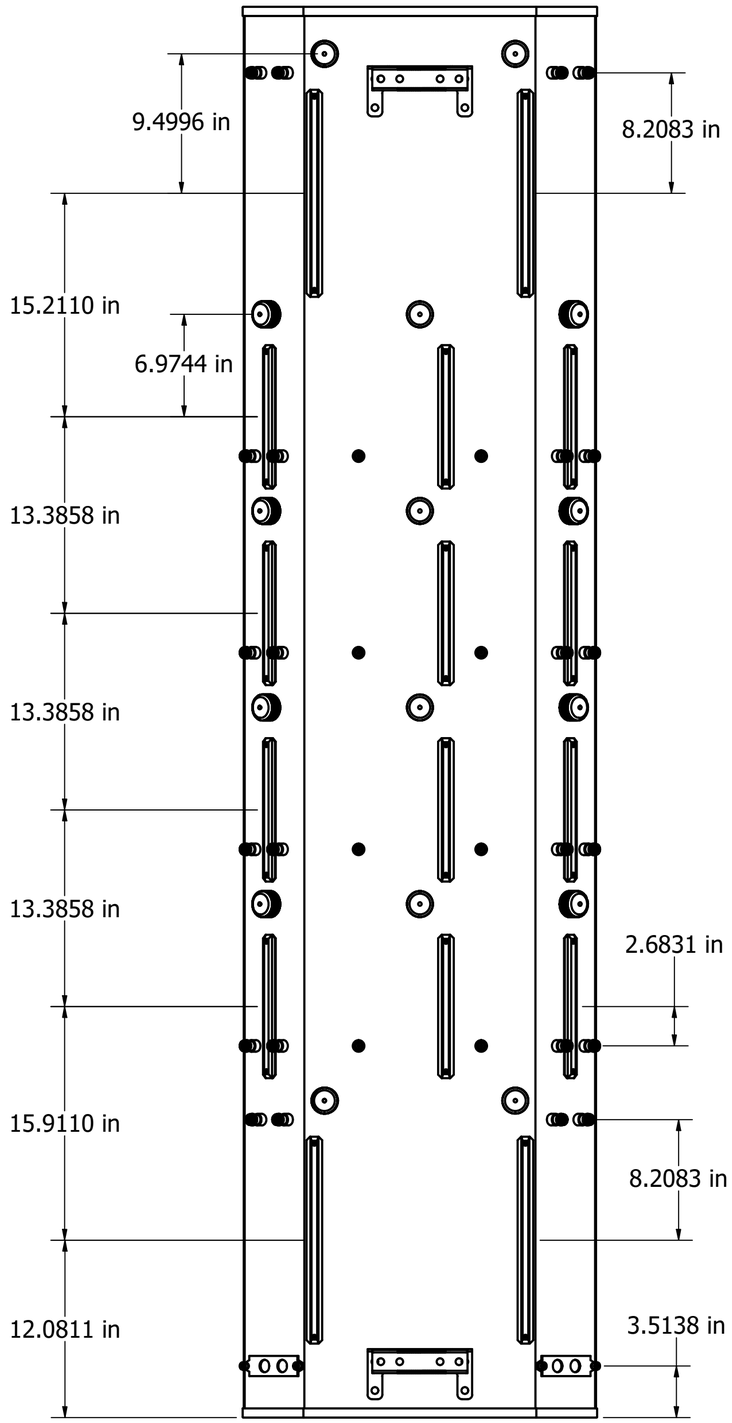

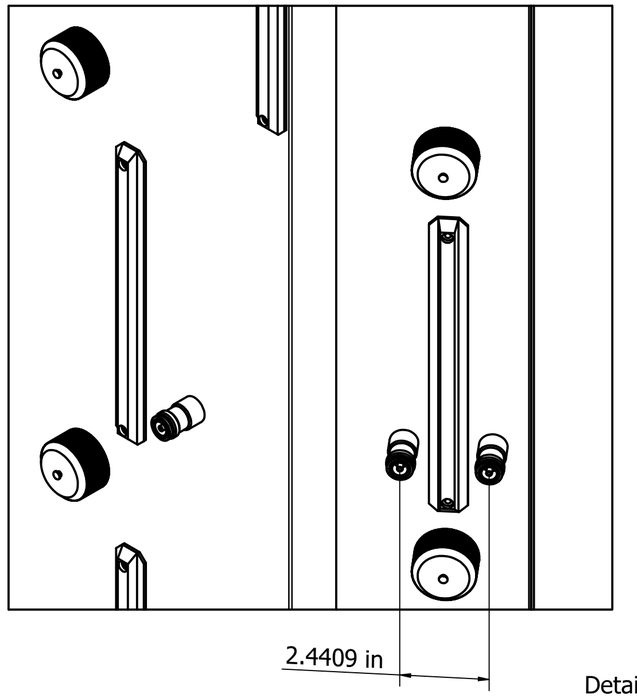

Detail C

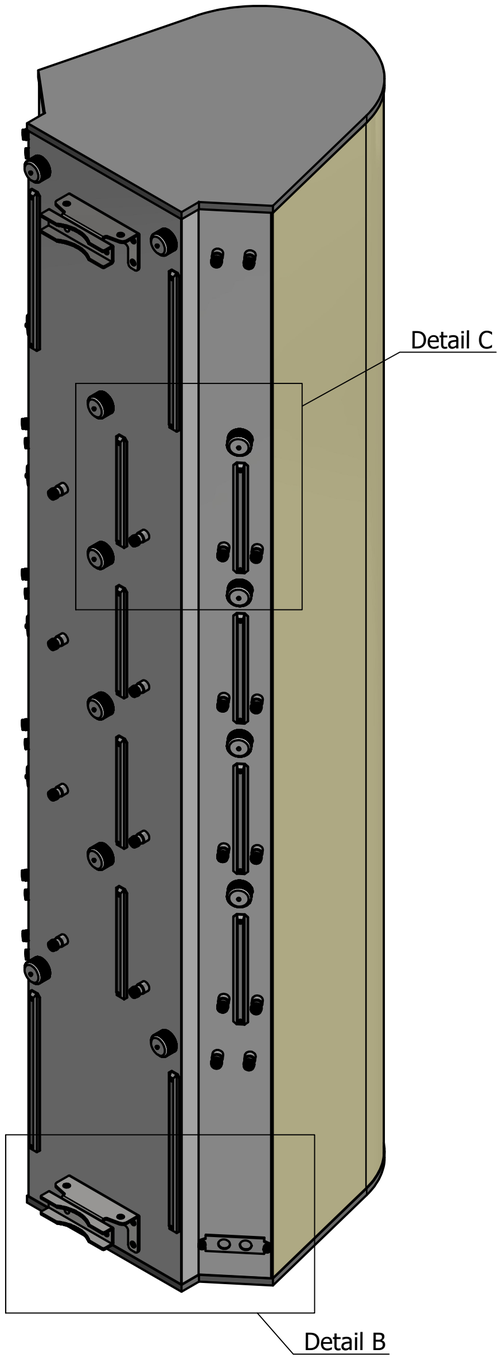

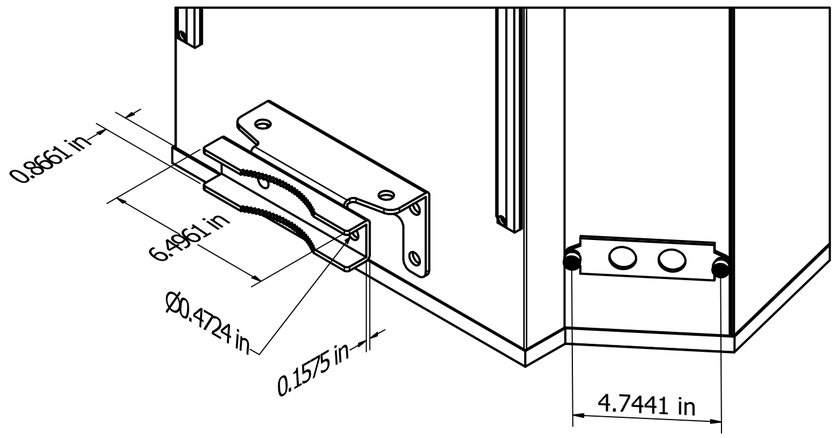

Detail B

Designed by	Drawing by	Date	Approved by	Date	Quantity	Material
ALEXANDRE	LAWRENCE	14/8/2020	PAVEL	17/8/2020		

MATSING® LENS TECHNOLOGY ENABLED

MS-MBA-3.2-H8-L4

MS-MBA-3.2-H8-L4 (in)

Revision 1.0

Sheet 2 / 3

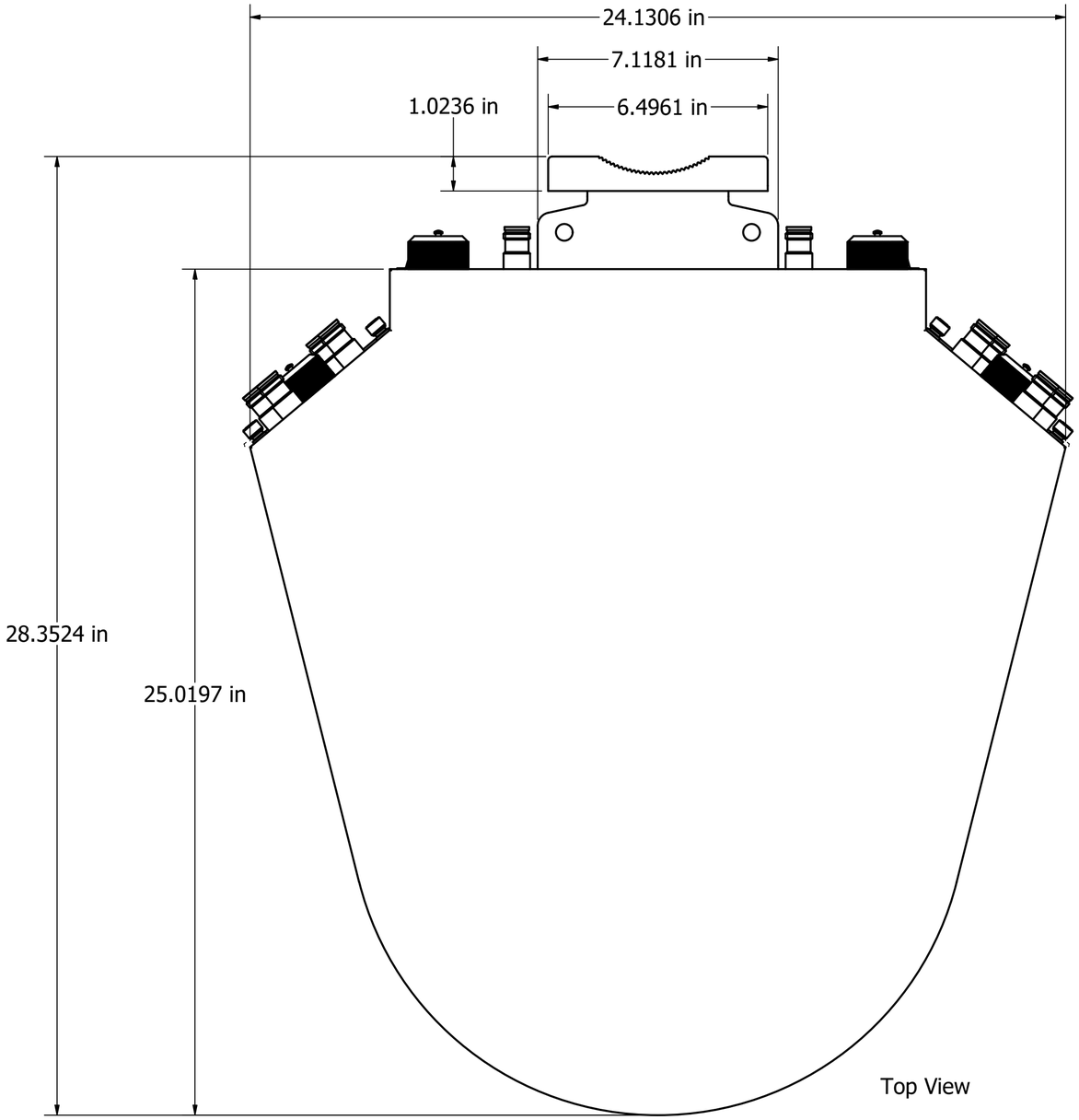

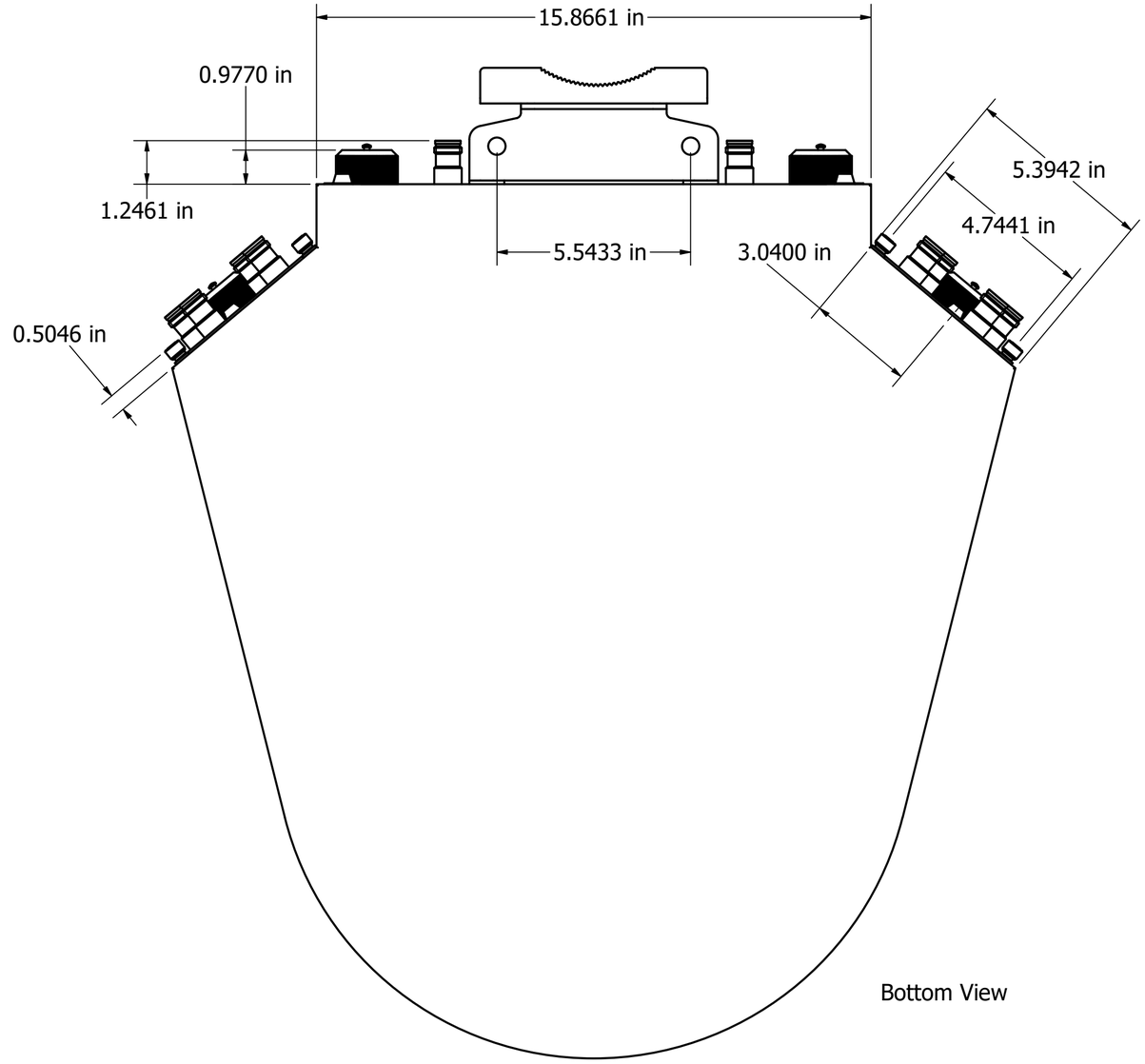

Designed by	Drawing by	Date	Approved by	Date	Quantity	Material
ALEXANDRE	LAWRENCE	14/8/2020	PAVEL	17/8/2020		

MATSING® LENS TECHNOLOGY ENABLED

MS-MBA-3.2-H8-L4

MS-MBA-3.2-H8-L4 (in)

Revision 1.0

Sheet 3 / 3