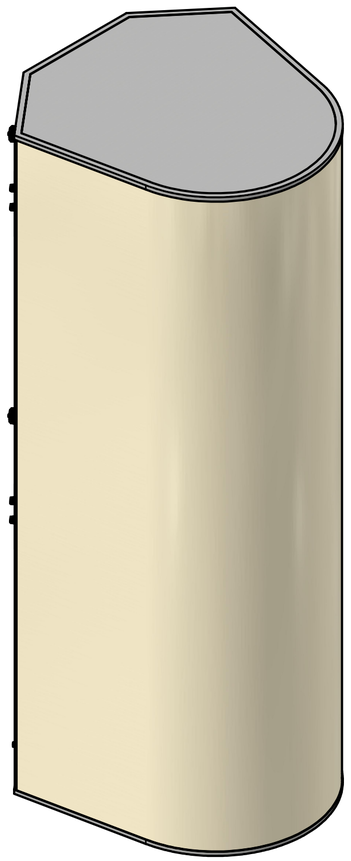

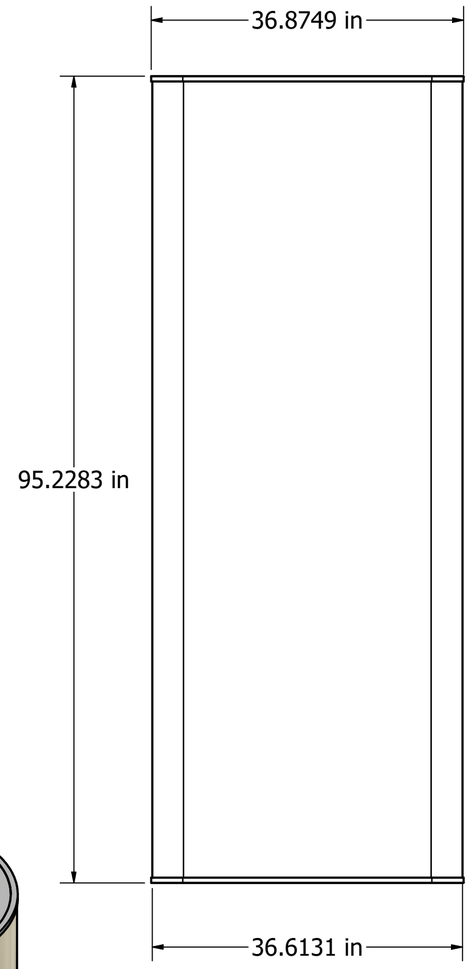

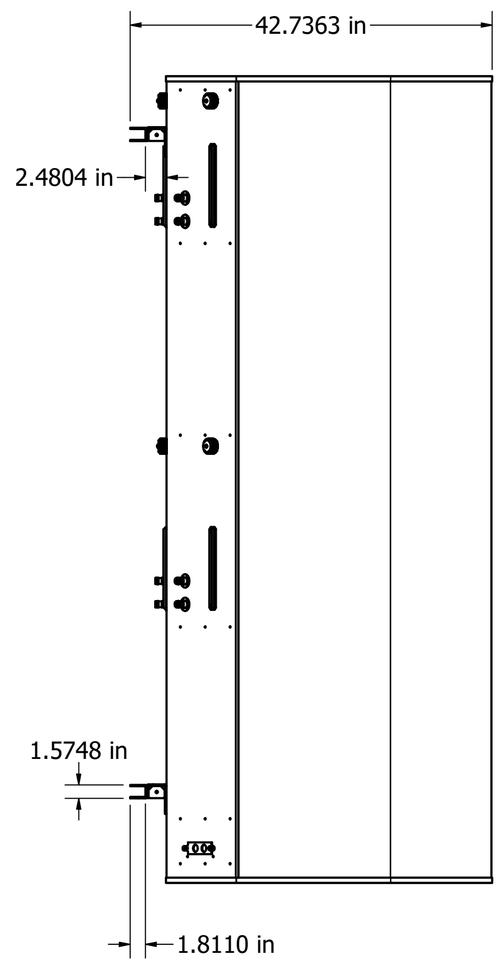

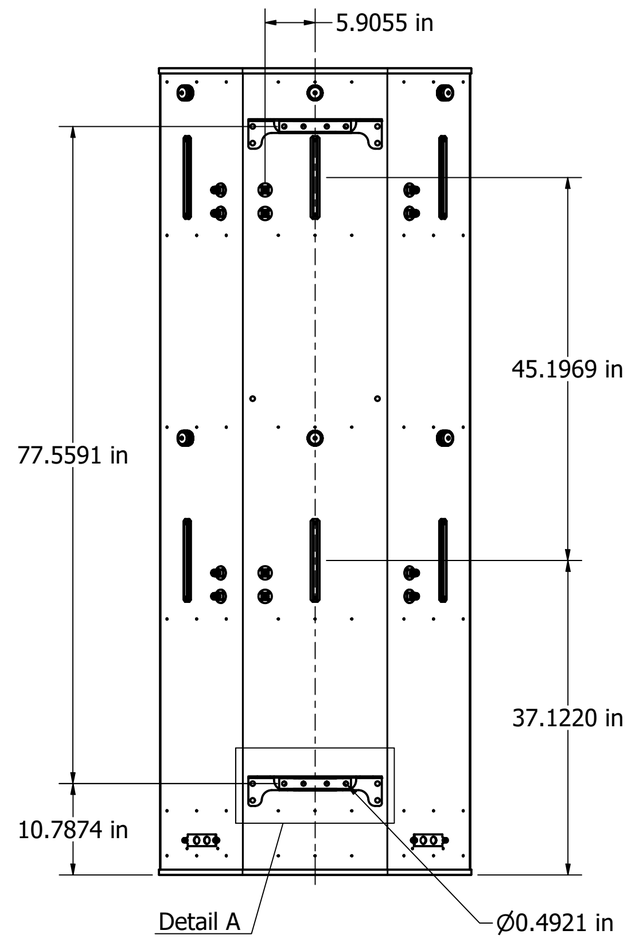

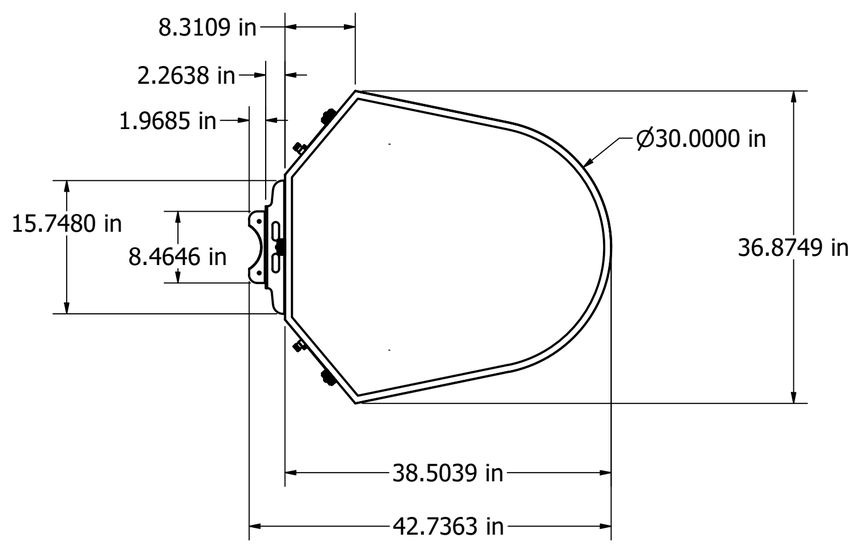

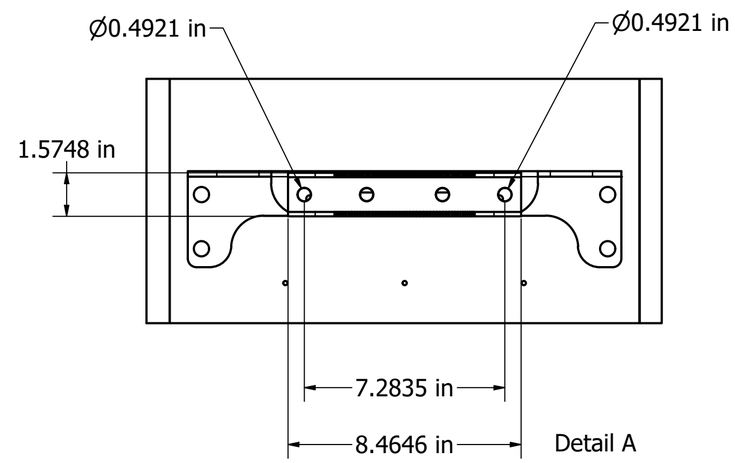

Designed by	Drawing by	Date	Approved by	Date	Quantity	Material
ALEXANDRE	LAWRENCE	19/9/2023	PAVEL	14/11/2023		

MATSING® LENS TECHNOLOGY ENABLED

MS-MBA-3-T4A2

MS-MBA-3-T4A2 (in)

Revision 1.0

Sheet 1 / 3

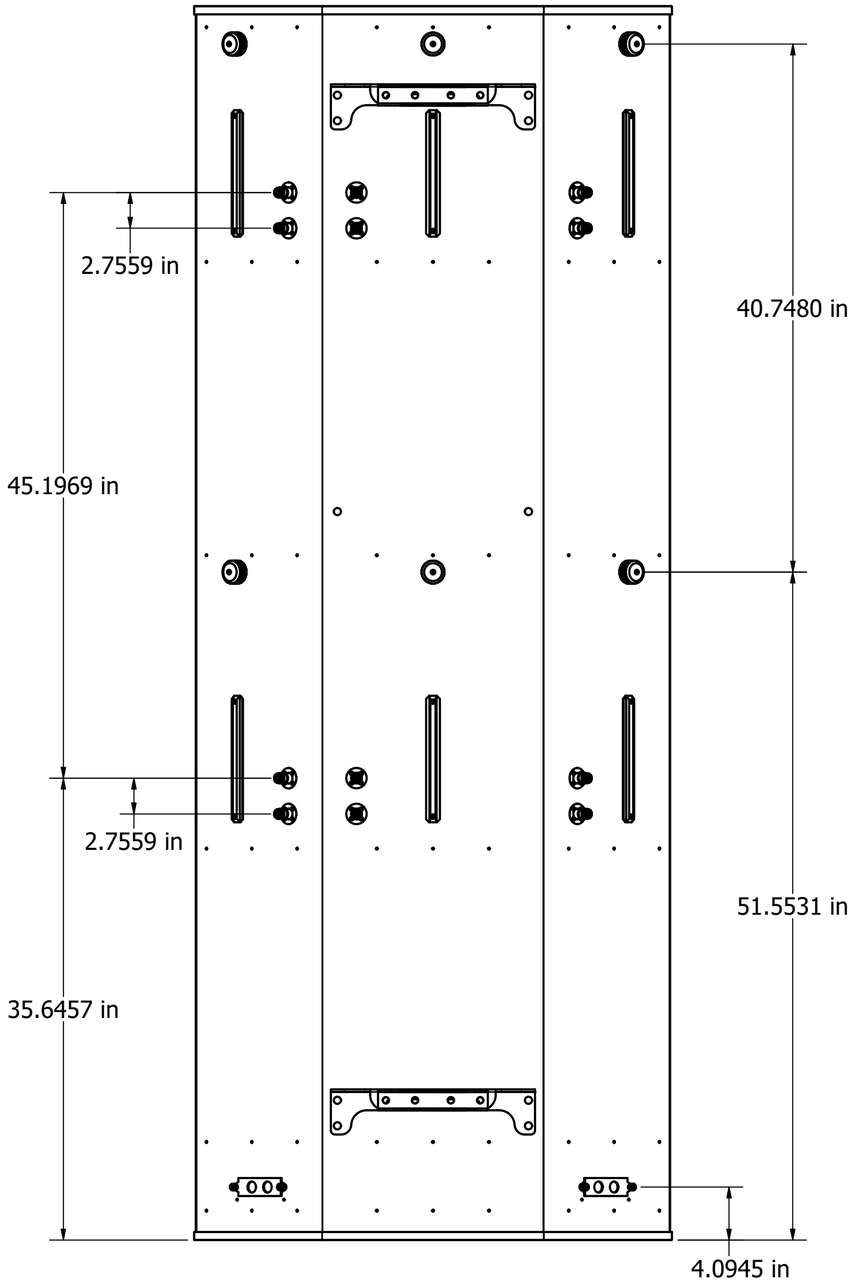

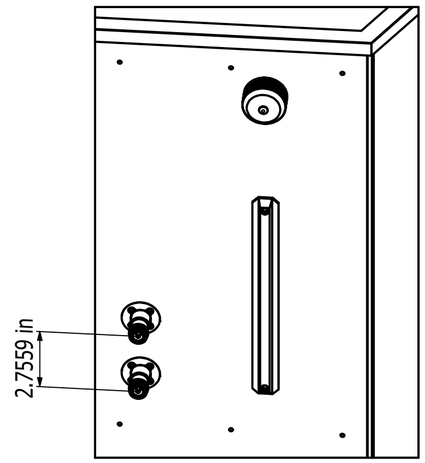

Detail C

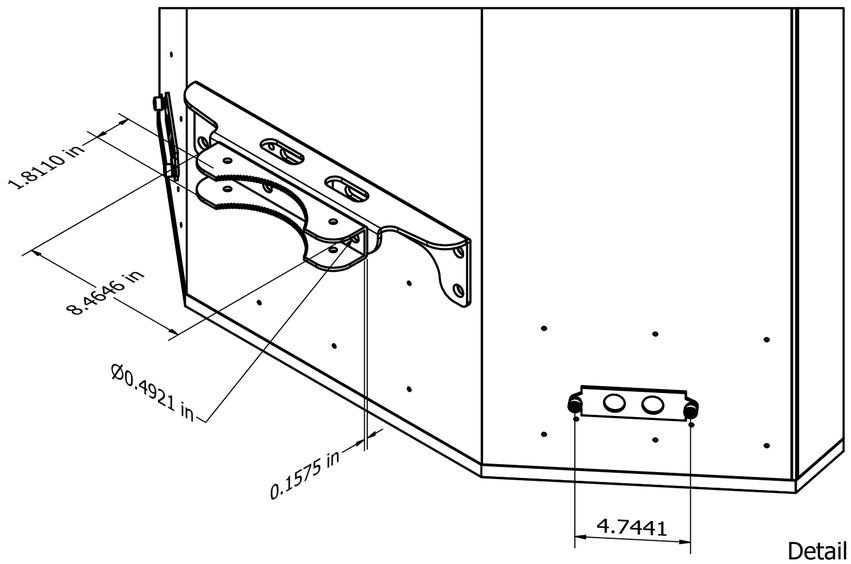

Detail B

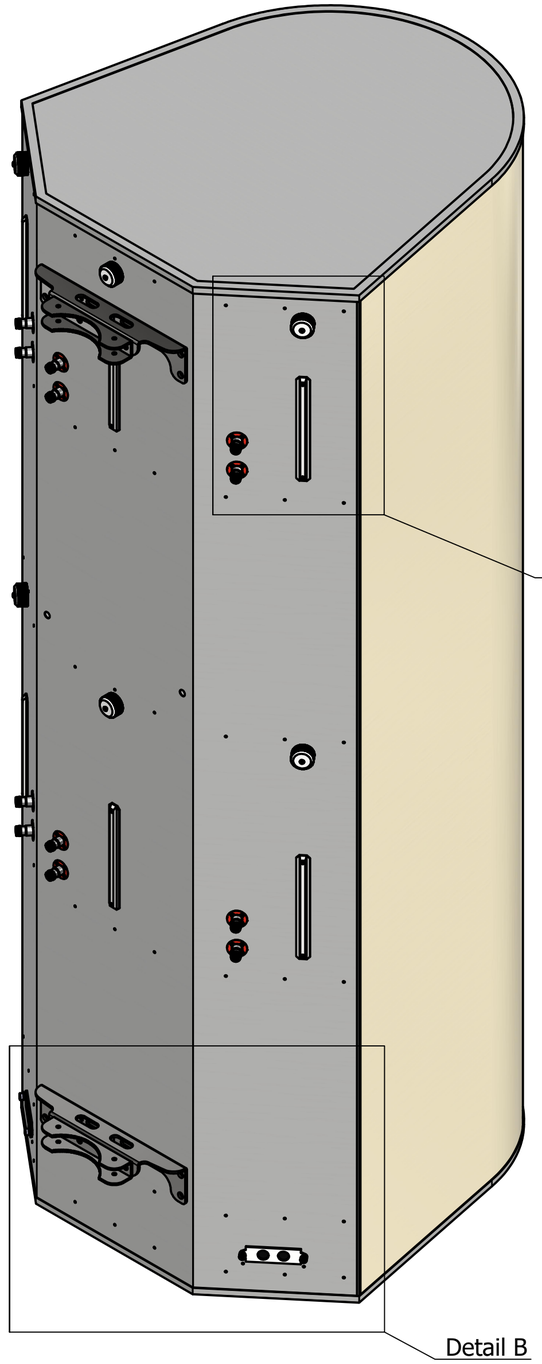

Designed by	Drawing by	Date	Approved by	Date	Quantity	Material
ALEXANDRE	LAWRENCE	19/9/2023	PAVEL	14/11/2023		

MATSING® LENS TECHNOLOGY ENABLED

MS-MBA-3-T4A2

MS-MBA-3-T4A2 (in)

Revision 1.0

Sheet 2 / 3

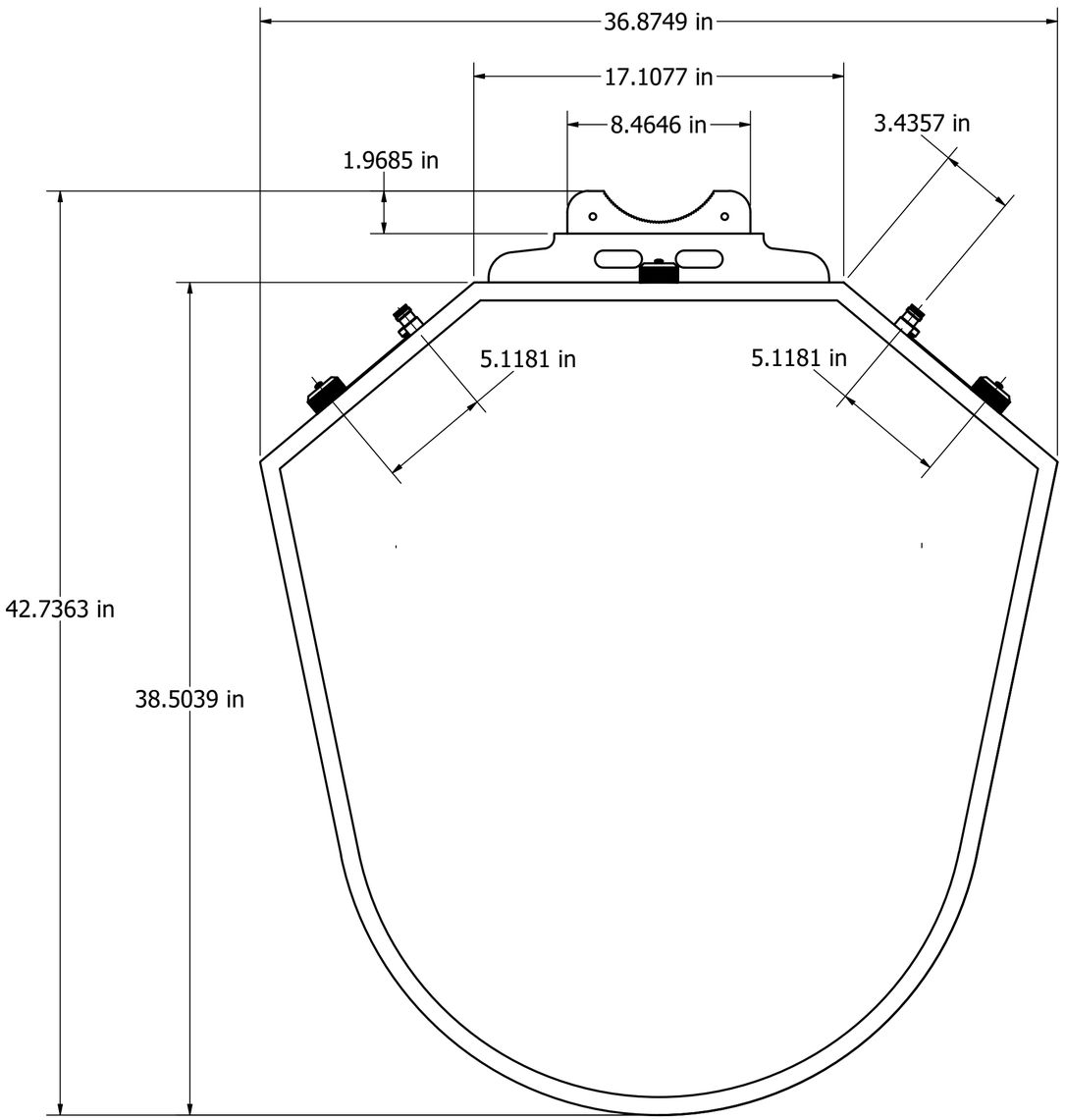

Top View

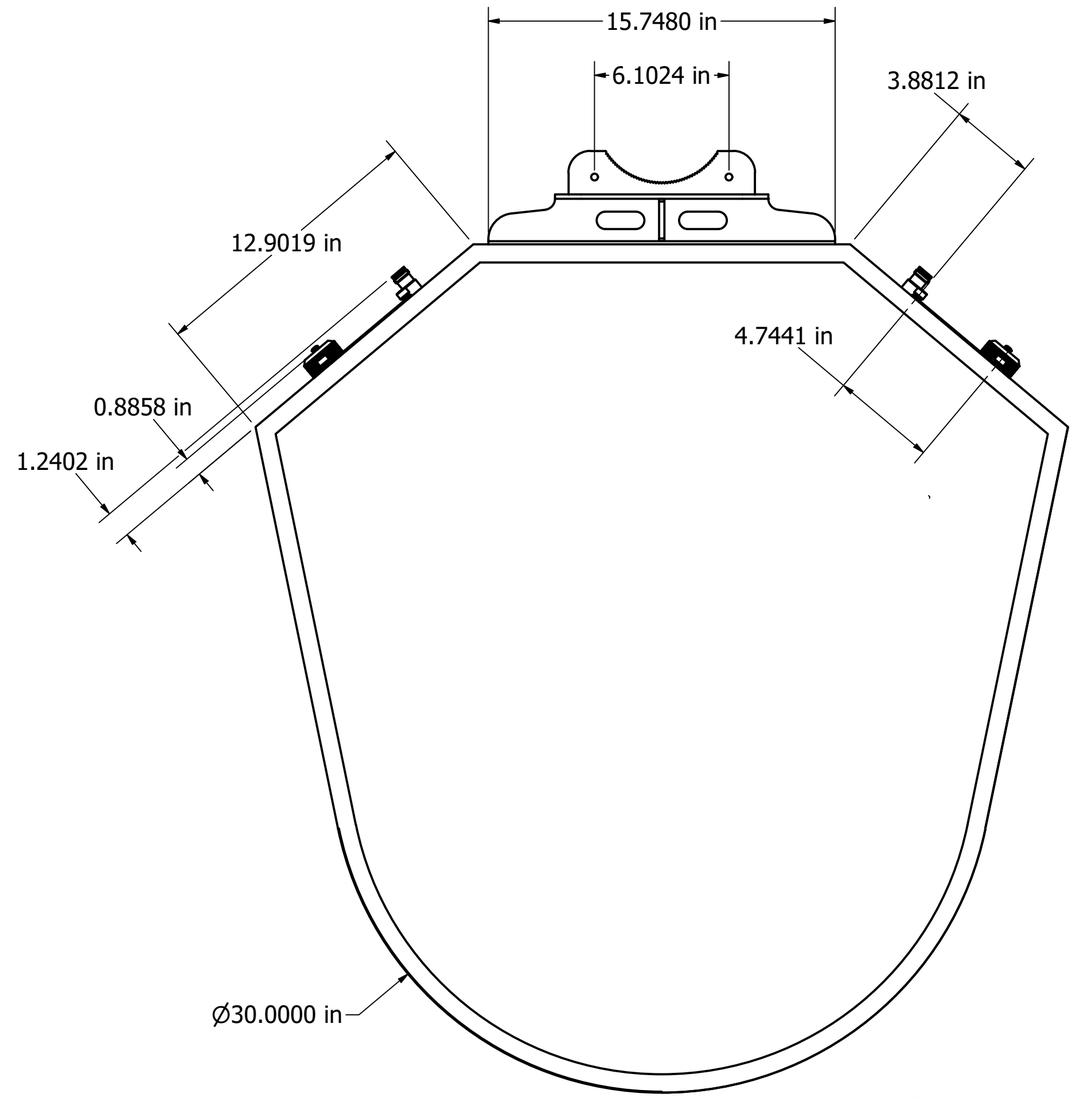

Bottom View

Designed by	Drawing by	Date	Approved by	Date	Quantity	Material
ALEXANDRE	LAWRENCE	19/9/2023	PAVEL	14/11/2023		

MATSING® LENS TECHNOLOGY ENABLED

MS-MBA-3-T4A2

MS-MBA-3-T4A2 (in)

Revision 1.0

Sheet 3 / 3