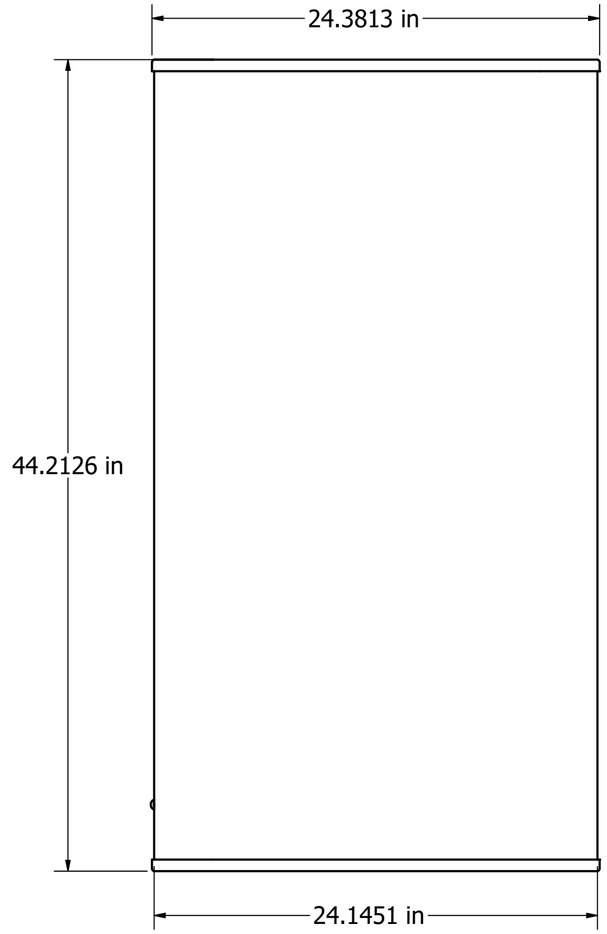

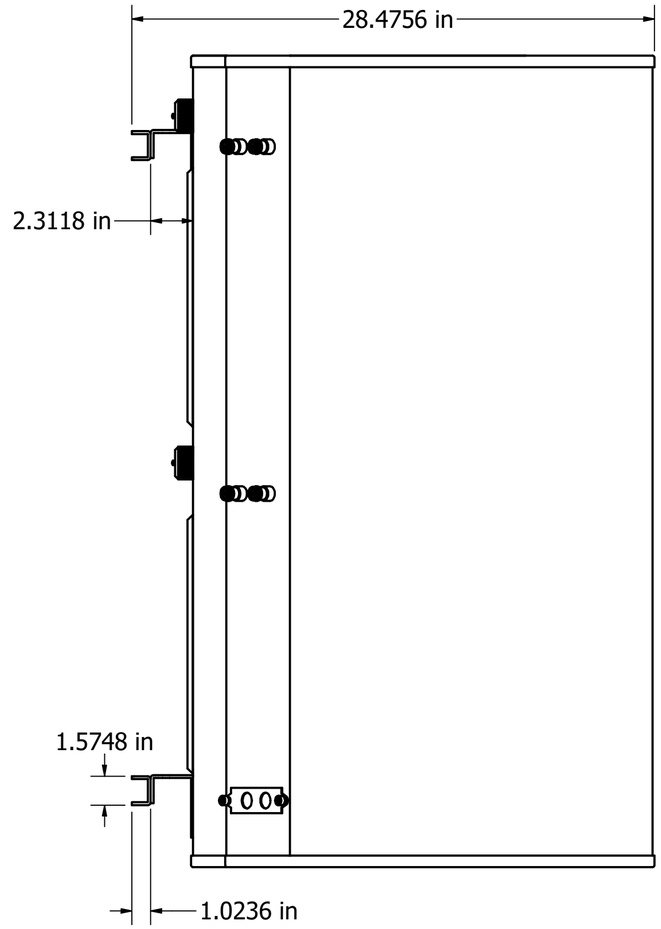

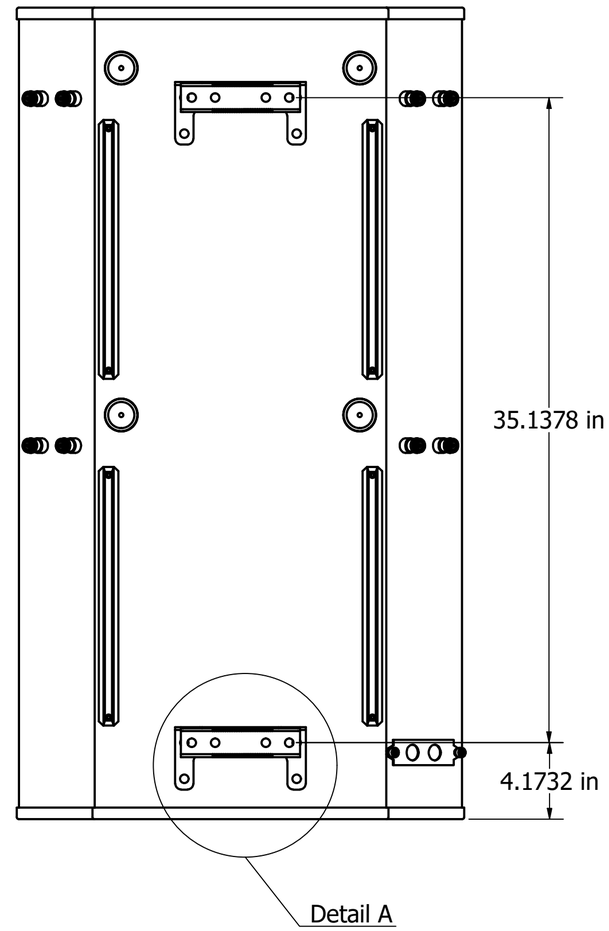

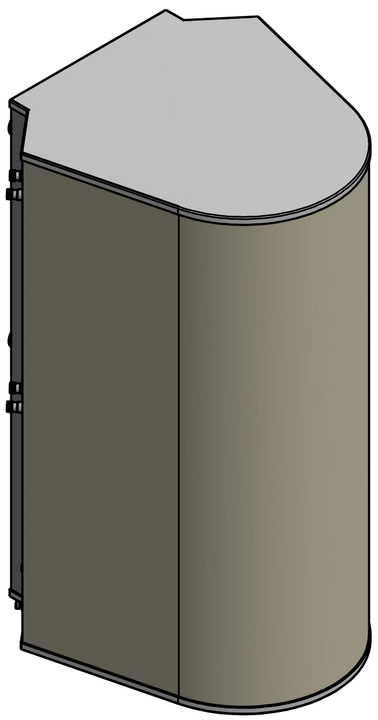

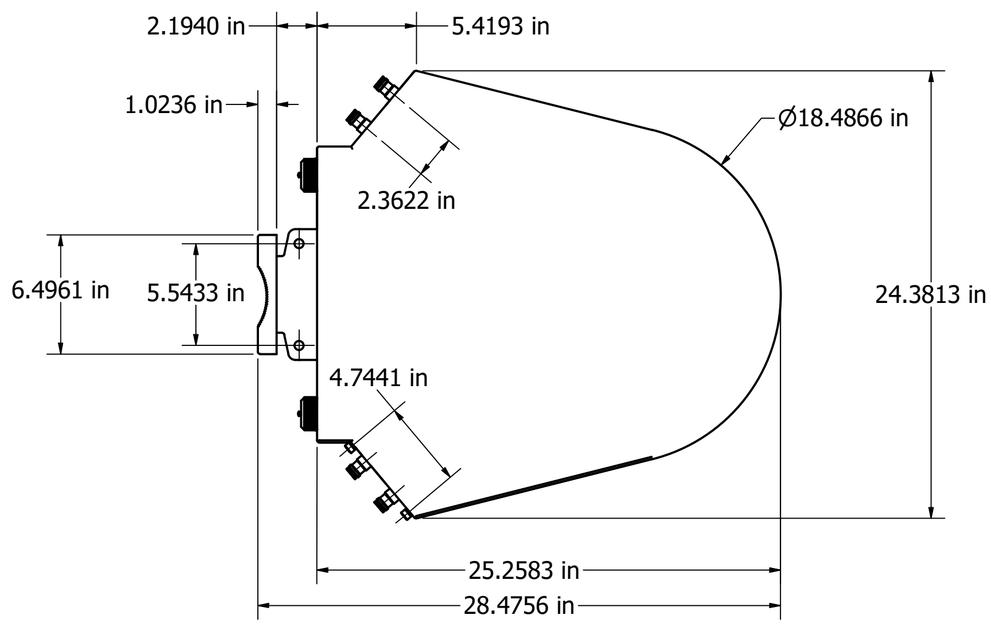

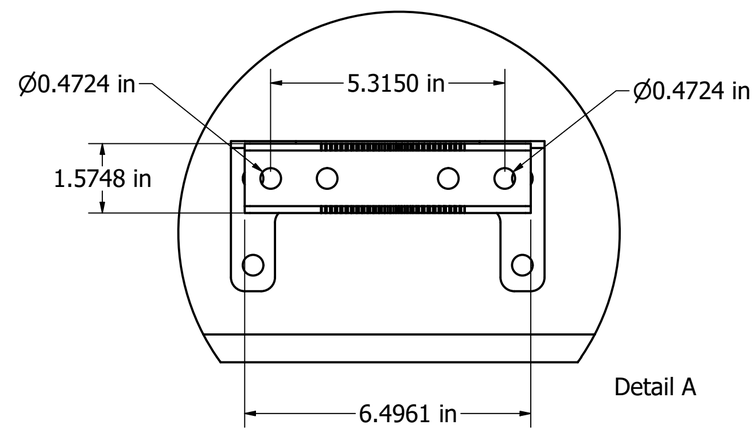

Designed by	Drawing by	Date	Approved by	Date	Quantity	Material
PAVEL	LAWRENCE	25/3/2020	PAVEL	26/3/2020		

MATSING® LENS TECHNOLOGY ENABLED

MS-MBA-2-L4

MS-MBA-2-L4 (in)

Revision	Sheet
1.0	1 / 3

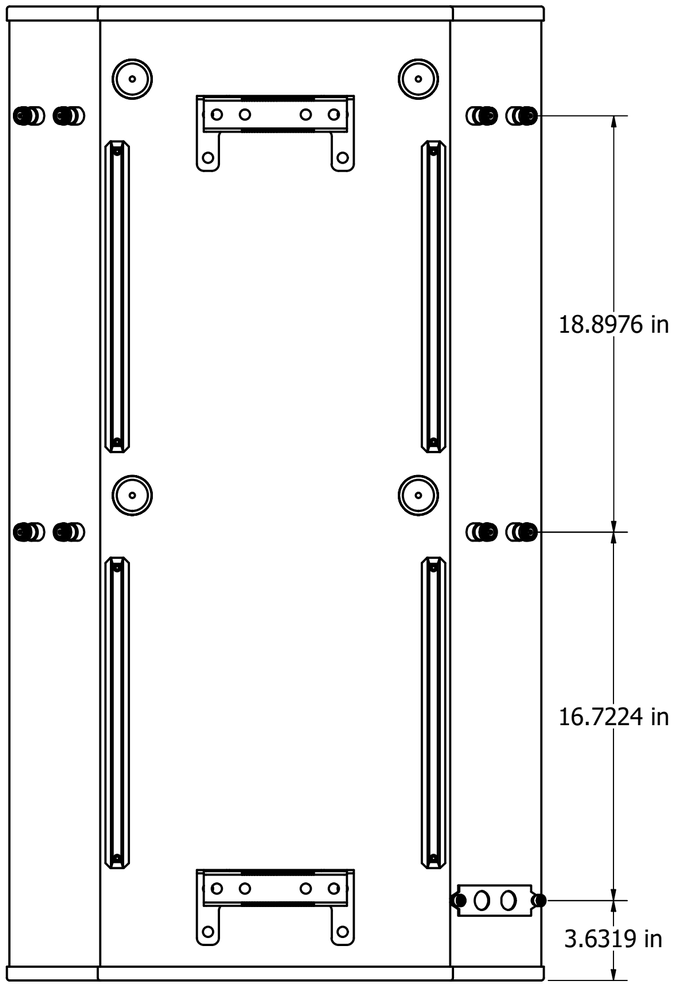

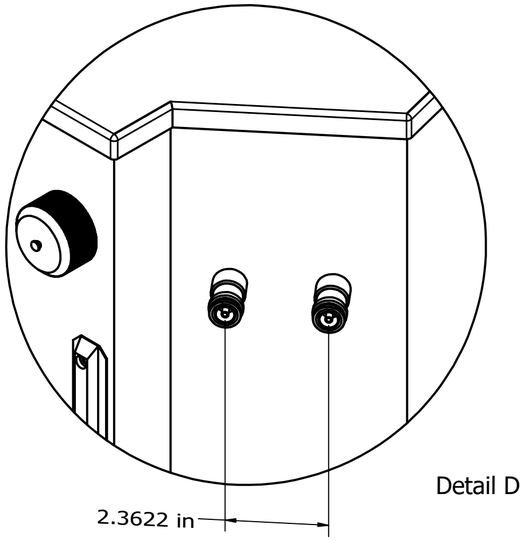

Detail D

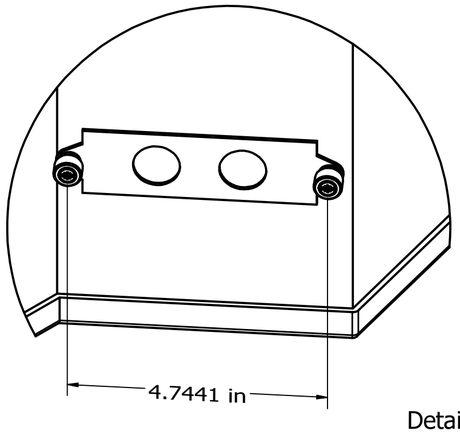

Detail C

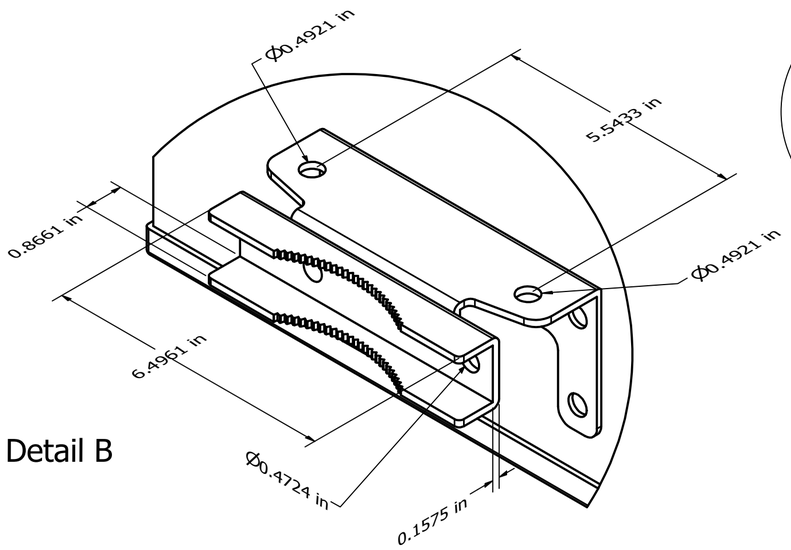

Detail B

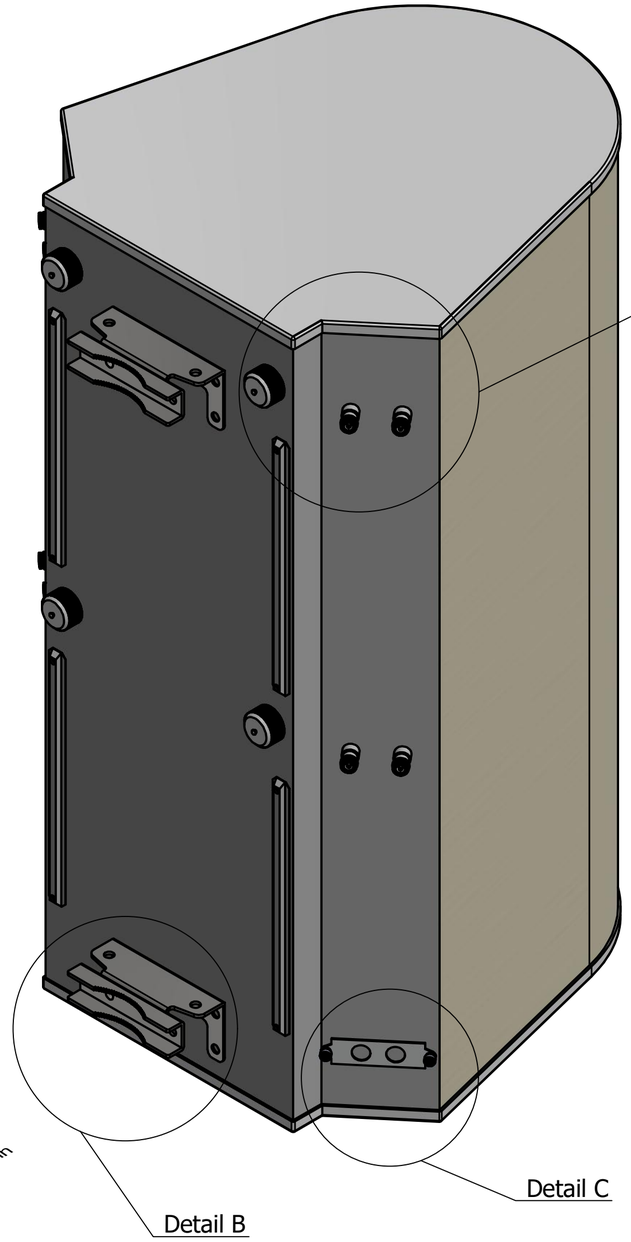

Designed by	Drawing by	Date	Approved by	Date	Quantity	Material
PAVEL	LAWRENCE	25/3/2020	PAVEL	26/3/2020		

MATSING® LENS TECHNOLOGY ENABLED

MS-MBA-2-L4

MS-MBA-2-L4 (in)

Revision 1.0

Sheet 2 / 3

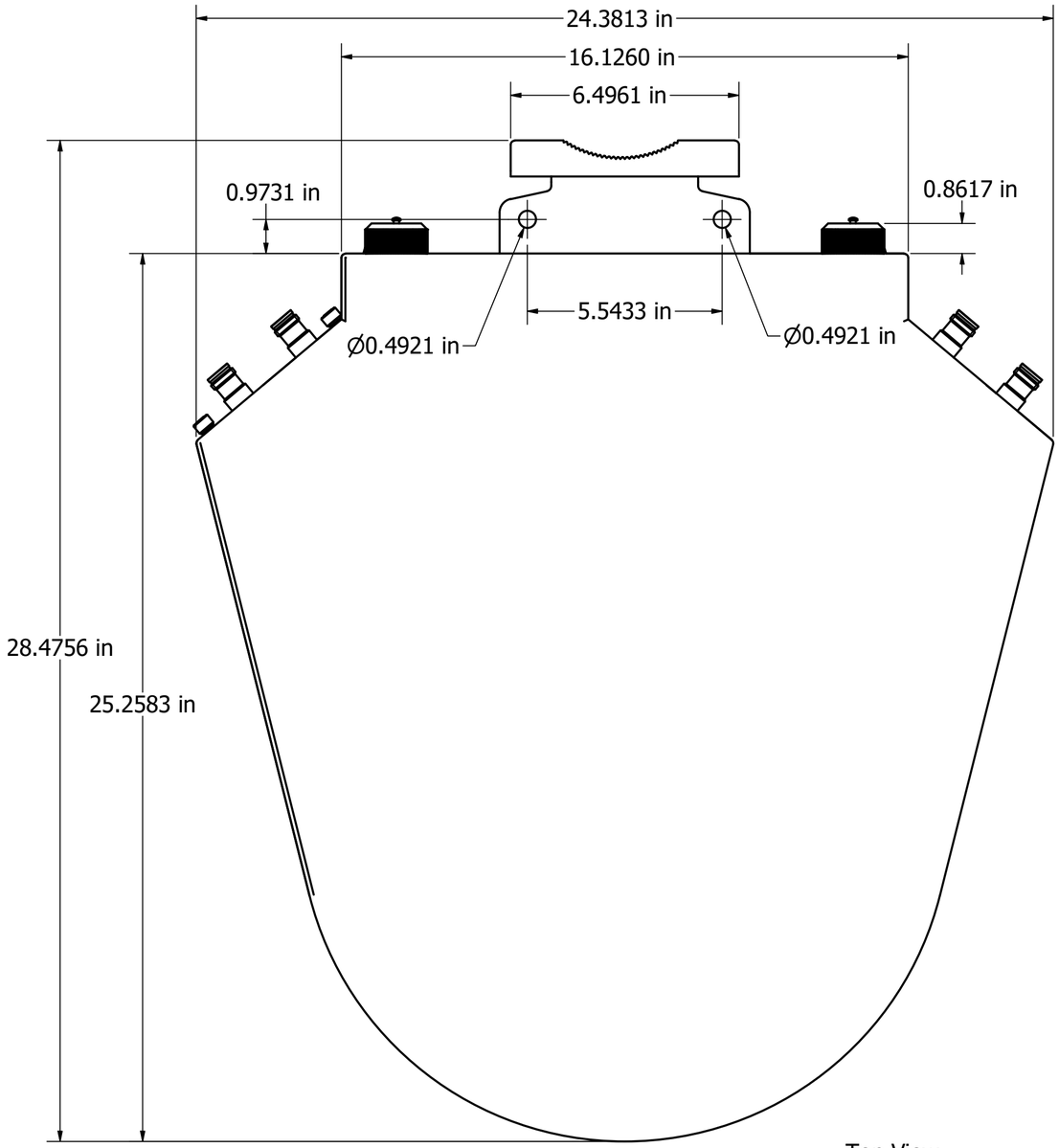

Top View

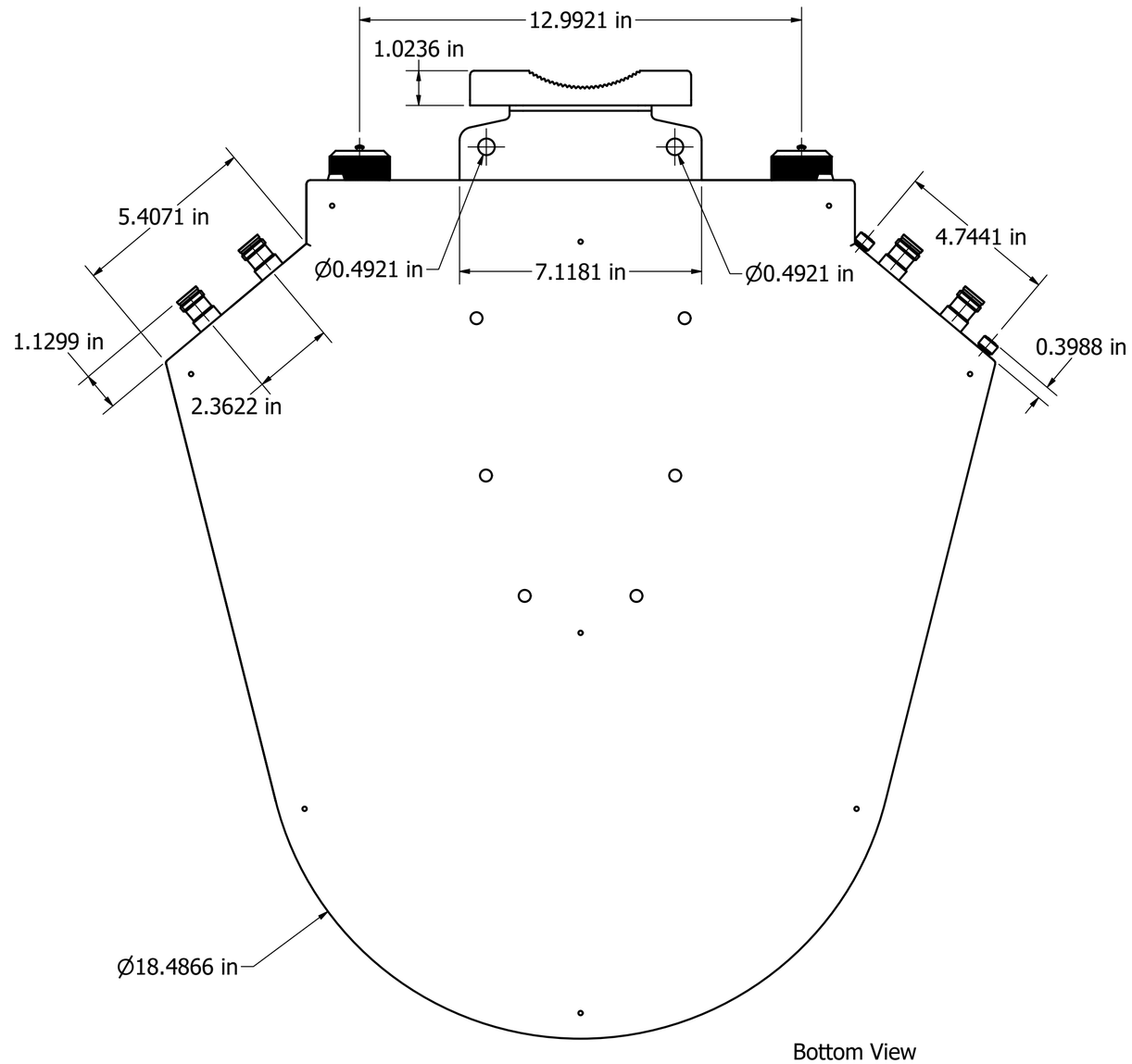

Bottom View

Designed by	Drawing by	Date	Approved by	Date	Quantity	Material
PAVEL	LAWRENCE	25/3/2020	PAVEL	26/3/2020		

MATSING® LENS TECHNOLOGY ENABLED

MS-MBA-2-L4

MS-MBA-2-L4 (in)

Revision 1.0

Sheet 3 / 3