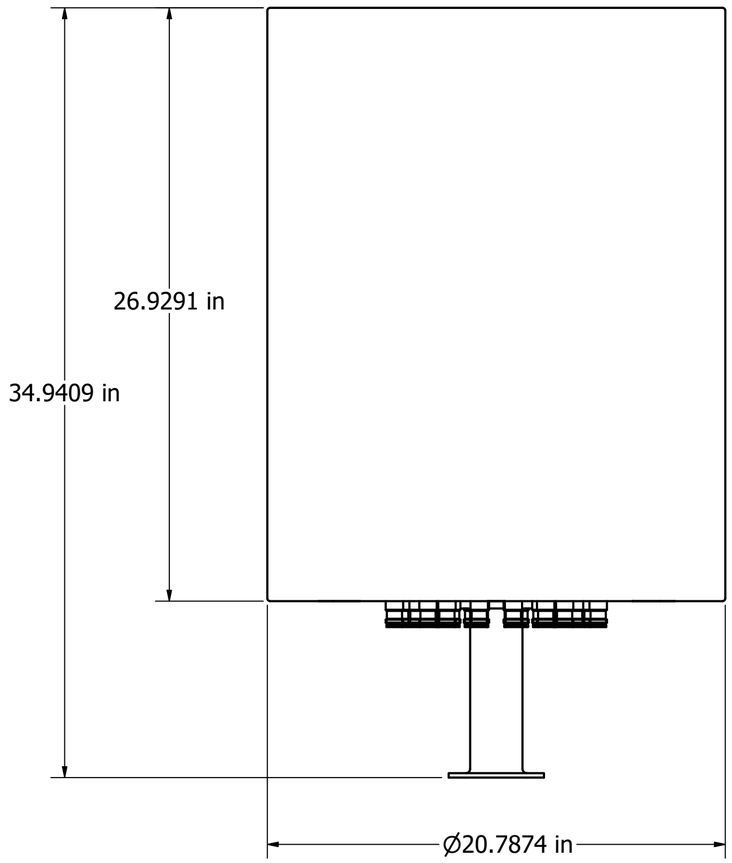

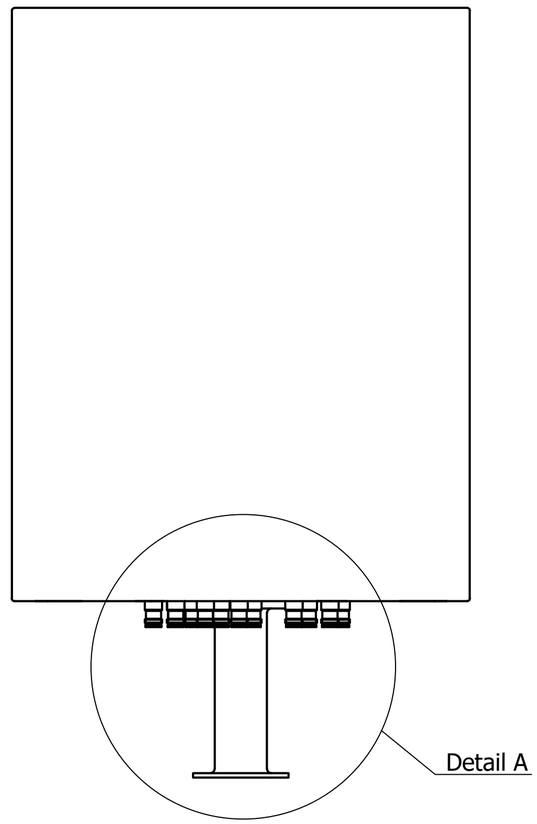

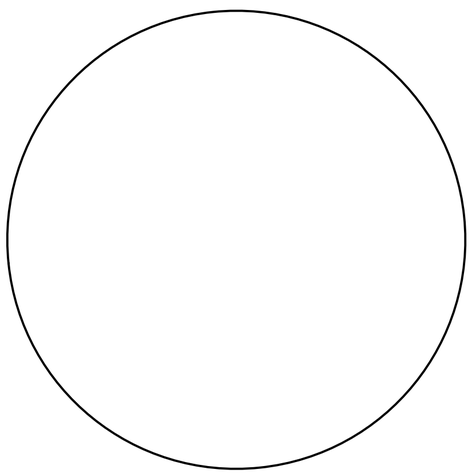

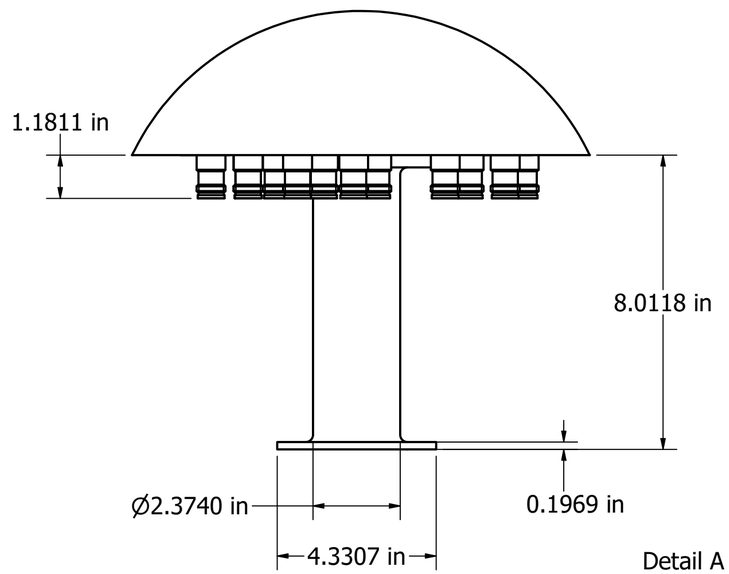

Detail A

Designed by	Drawing by	Date	Approved by	Date	Quantity	Material
PAVEL	LAWRENCE	19/08/2021	PAVEL	19/08/2021		

MATSING® LENS TECHNOLOGY ENABLED

MS-LP-6-H4

MS-LP-6-H4 (in)

Revision	Sheet
1.0	1 / 2

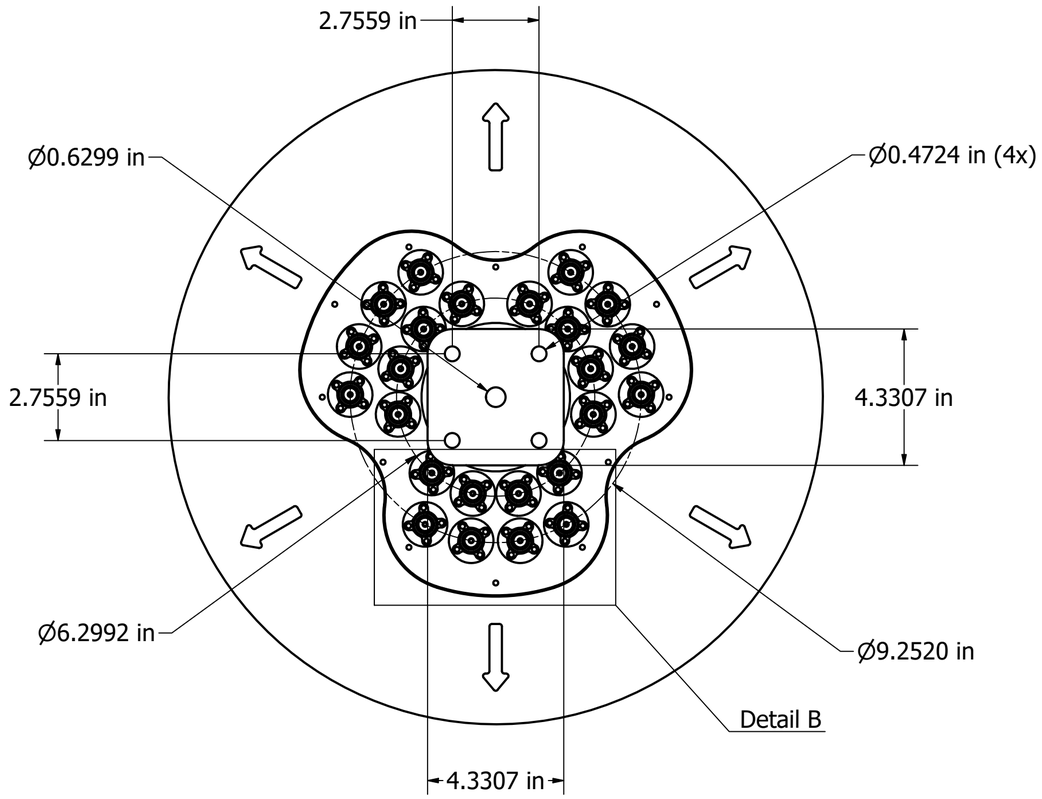

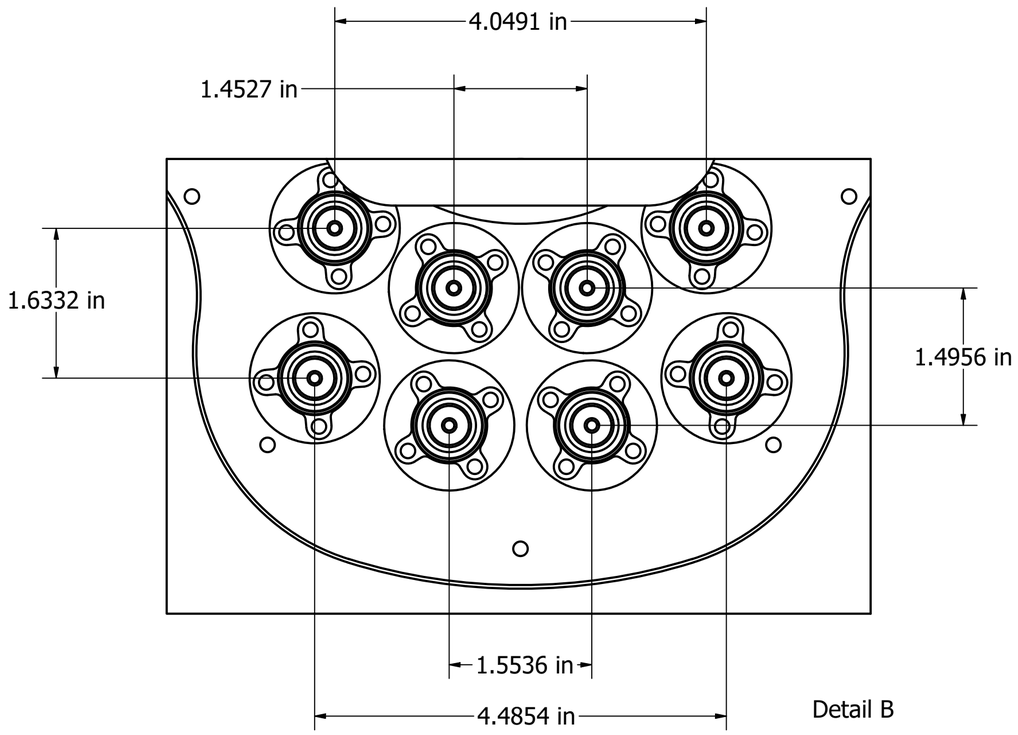

Detail B

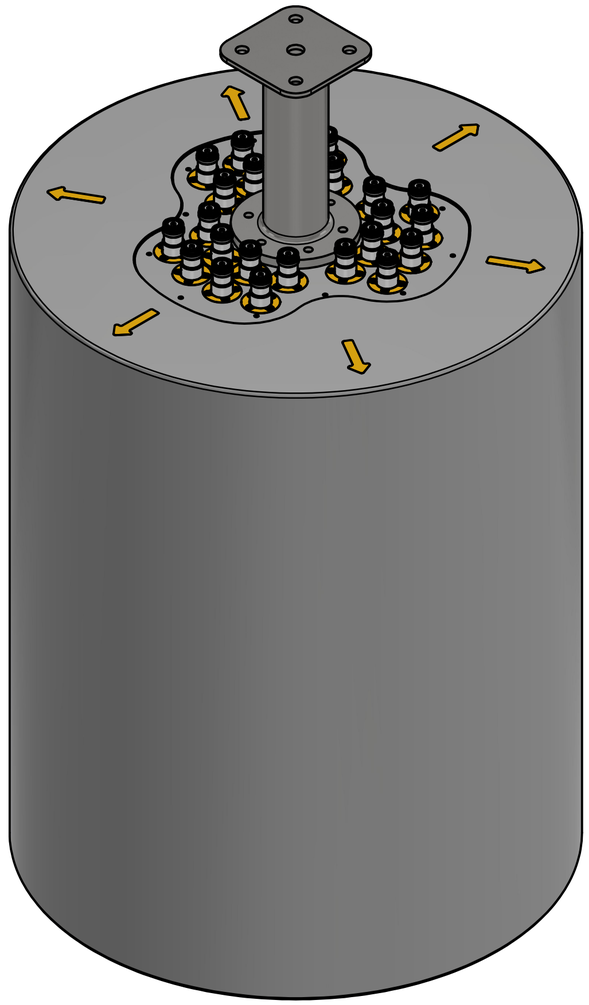

Designed by	Drawing by	Date	Approved by	Date	Quantity	Material
PAVEL	LAWRENCE	19/08/2021	PAVEL	19/08/2021		

MATSING® LENS TECHNOLOGY ENABLED

MS-LP-6-H4

MS-LP-6-H4 (in)

Revision 1.0

Sheet 2 / 2