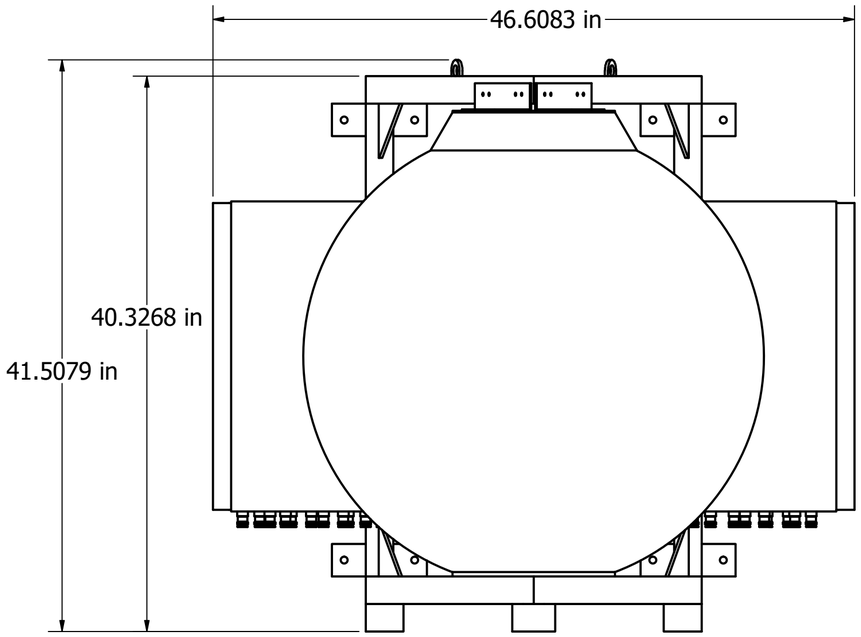

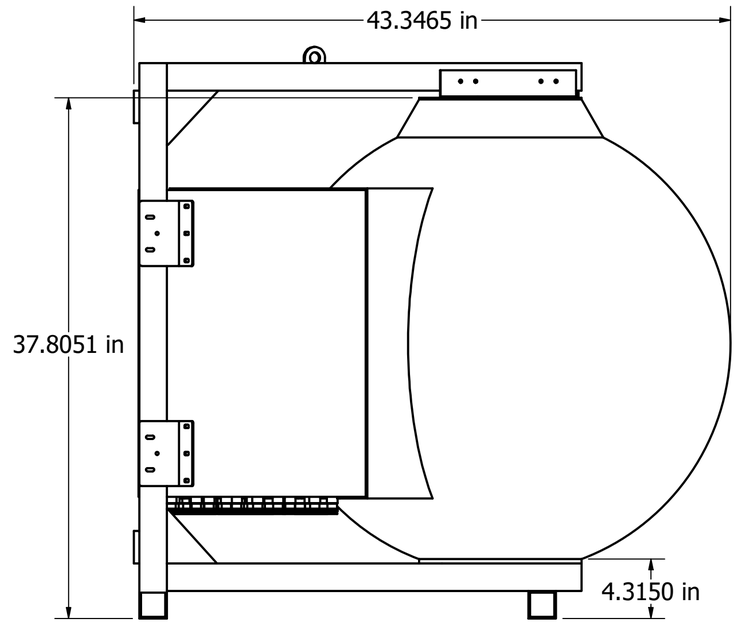

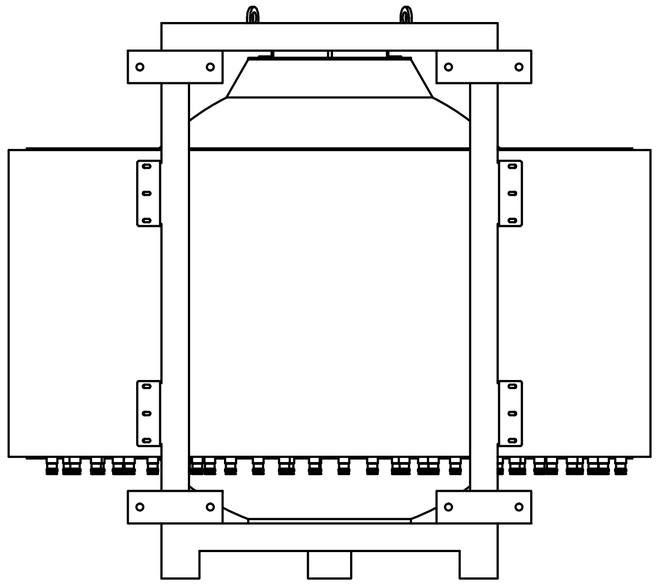

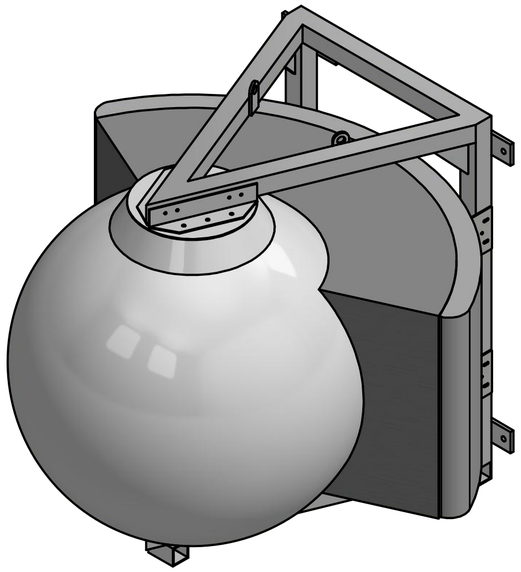

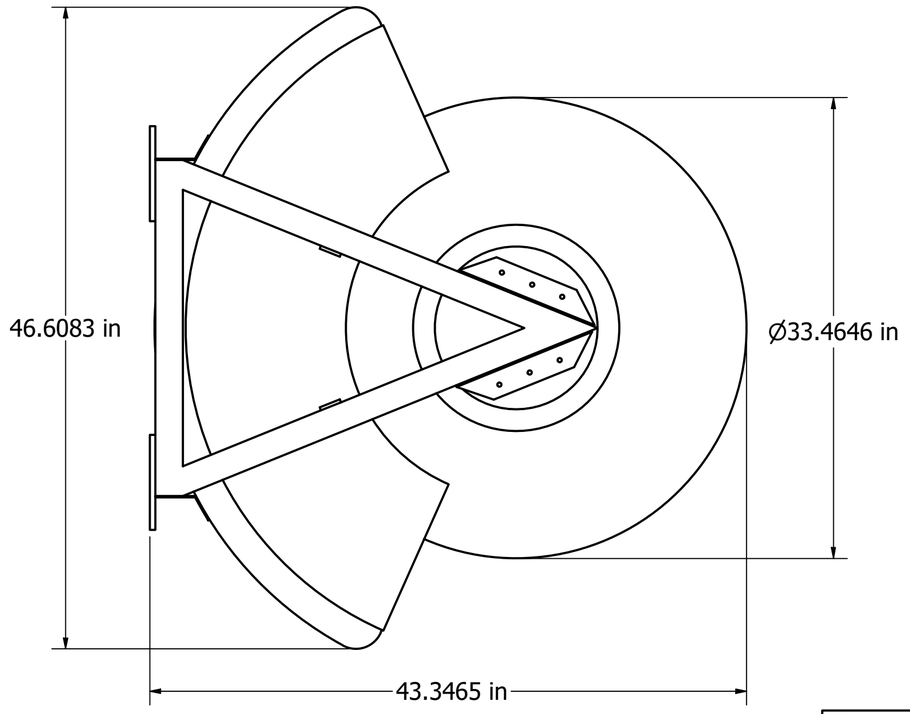

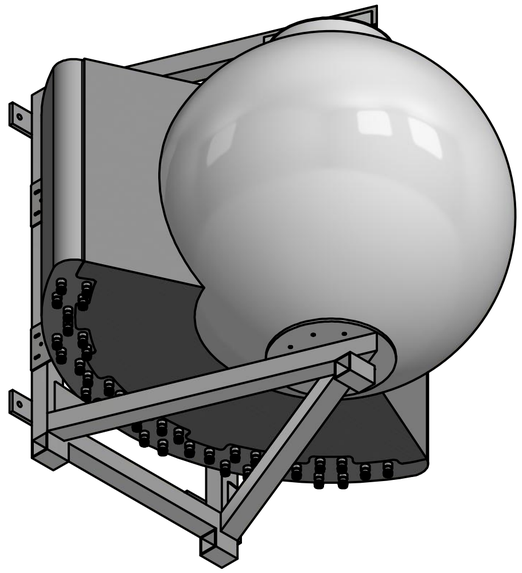

Designed by	Drawing by	Date	Approved by	Date	Quantity	Material
ALEXANDRE	LAWRENCE	3/12/2019	PAVEL	3/12/2019		

MATSING® LENS TECHNOLOGY ENABLED

MS-18H90

MS-18H90 (in)

Revision 1.0

Sheet 1 / 6

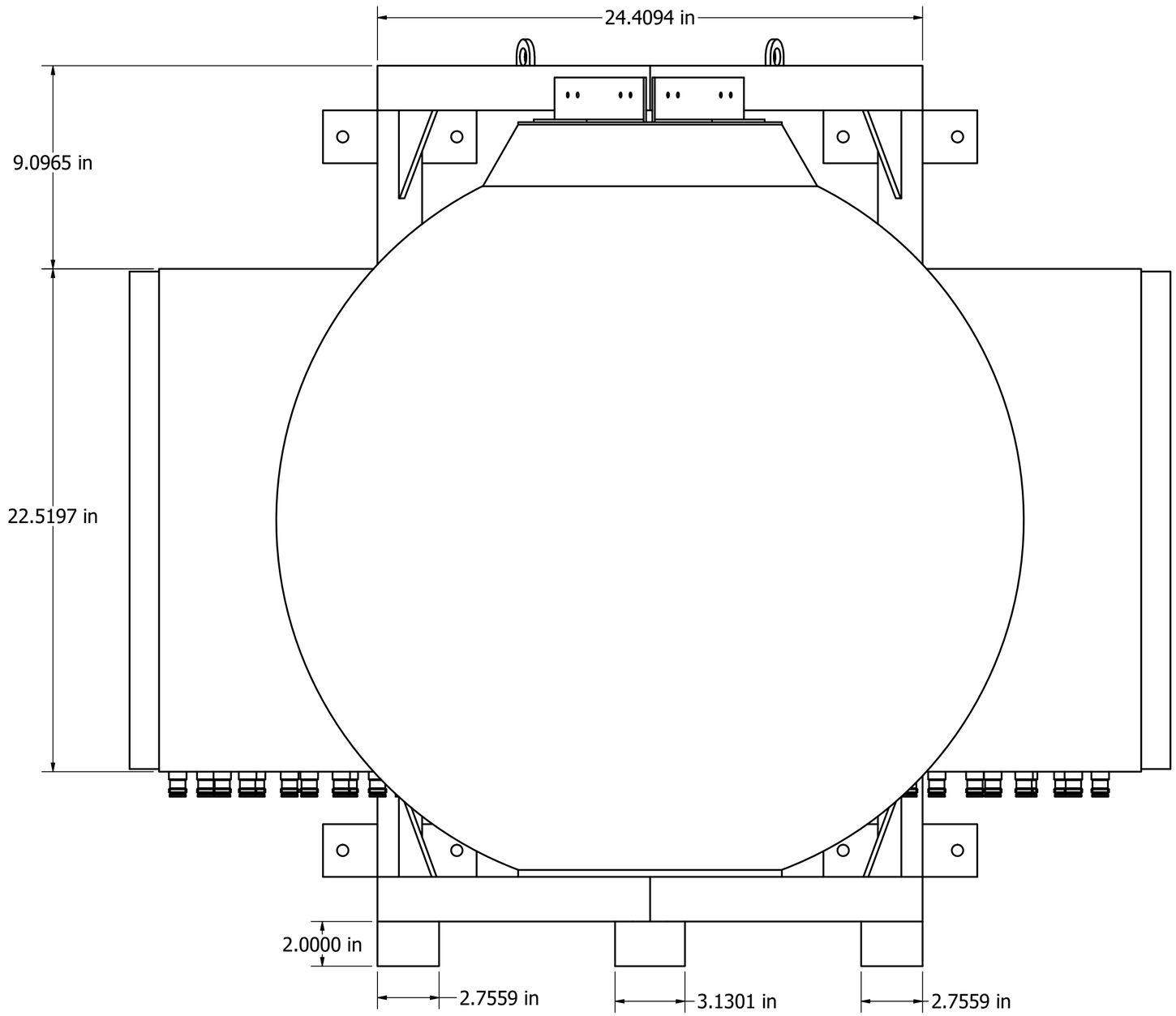

Designed by	Drawing by	Date	Approved by	Date	Quantity	Material
ALEXANDRE	LAWRENCE	3/12/2019	PAVEL	3/12/2019		

MATSING® LENS TECHNOLOGY ENABLED

MS-18H90

MS-18H90 (in)

Revision 1.0

Sheet 2 / 6

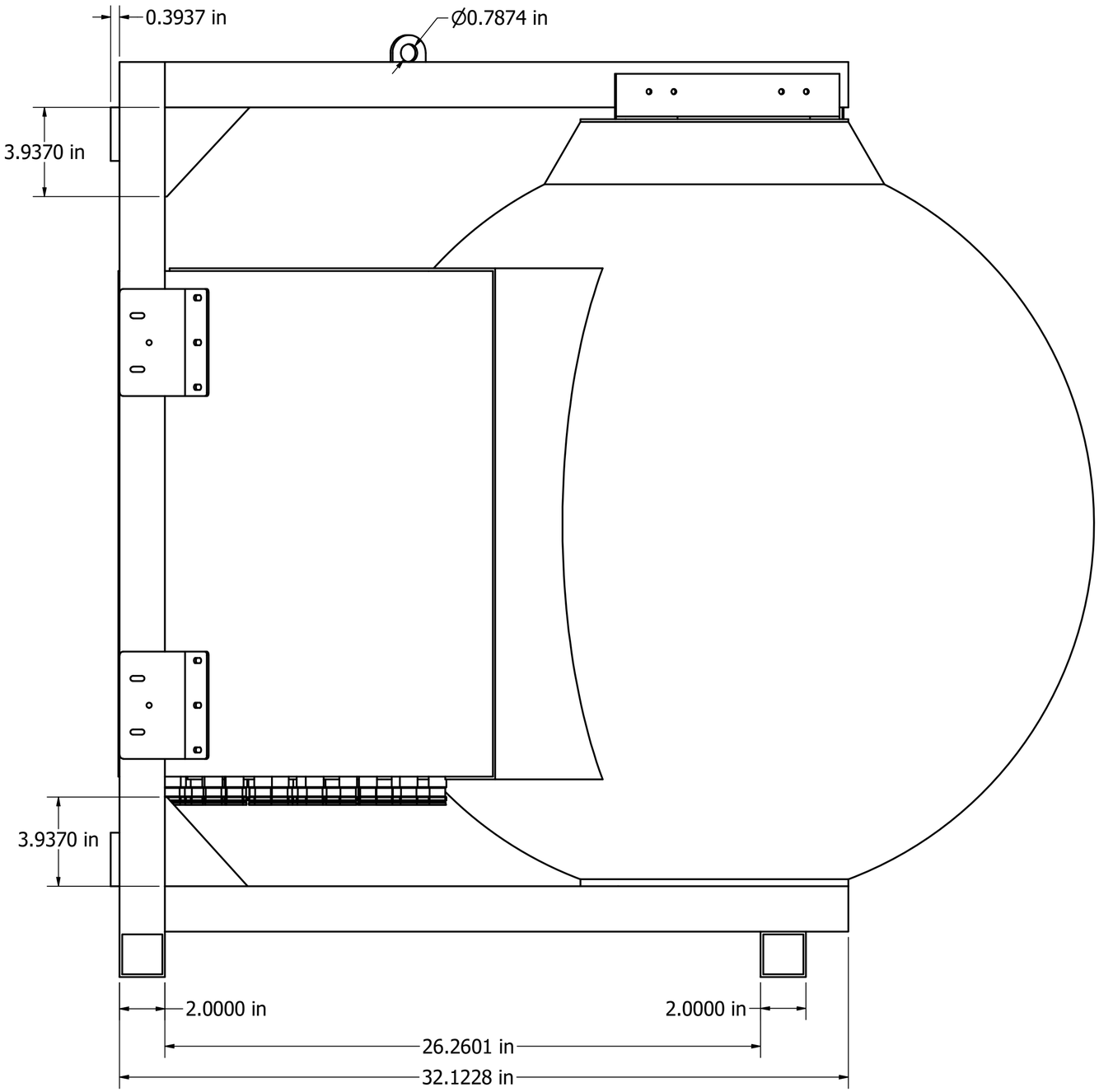

Designed by	Drawing by	Date	Approved by	Date	Quantity	Material
ALEXANDRE	LAWRENCE	3/12/2019	PAVEL	3/12/2019		

MATSING® LENS TECHNOLOGY ENABLED

MS-18H90

MS-18H90 (in)

Revision 1.0

Sheet 3 / 6

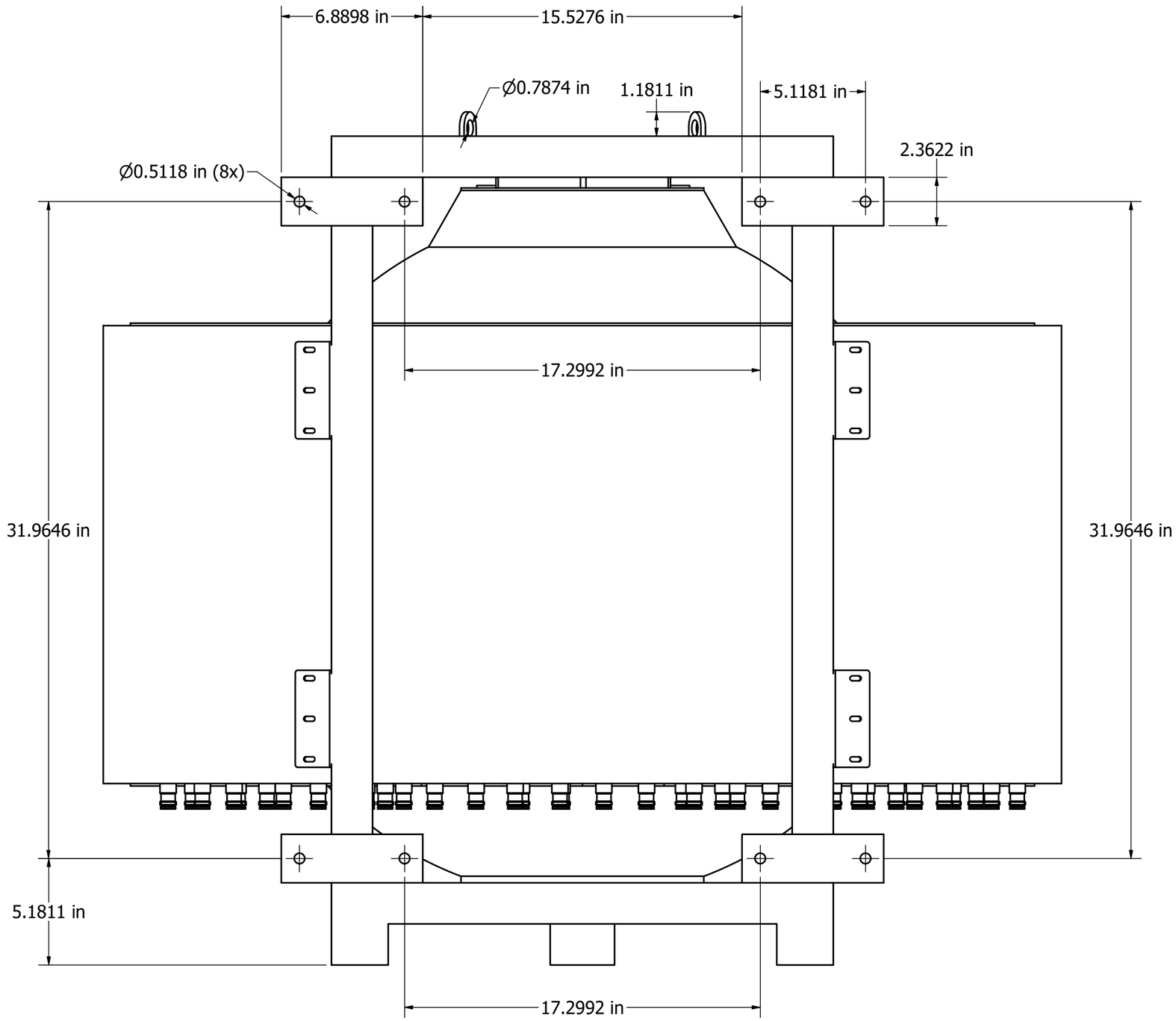

Designed by	Drawing by	Date	Approved by	Date	Quantity	Material
ALEXANDRE	LAWRENCE	3/12/2019	PAVEL	3/12/2019		

MATSING® LENS TECHNOLOGY ENABLED

MS-18H90

MS-18H90 (in)

Revision 1.0

Sheet 4 / 6

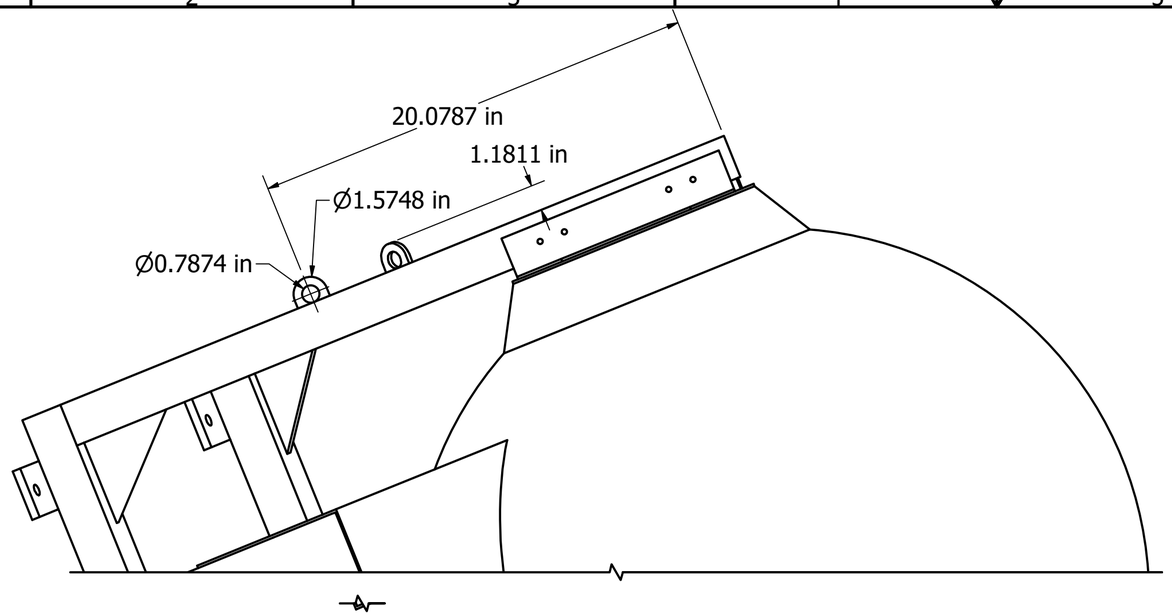

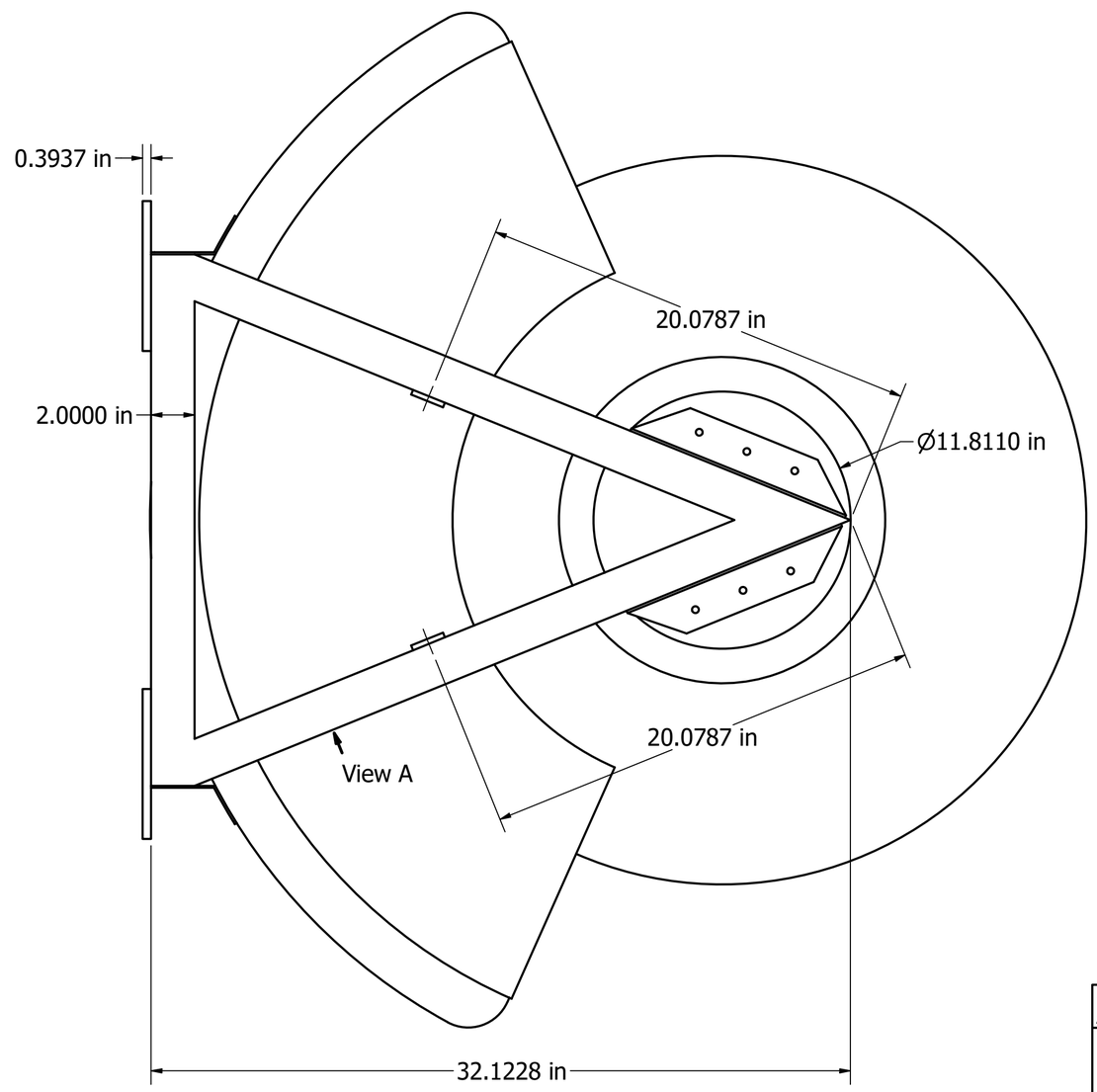

Designed by	Drawing by	Date	Approved by	Date	Quantity	Material
ALEXANDRE	LAWRENCE	3/12/2019	PAVEL	3/12/2019		

MATSING® LENS TECHNOLOGY ENABLED

MS-18H90

MS-18H90 (in)

Revision 1.0

Sheet 5 / 6

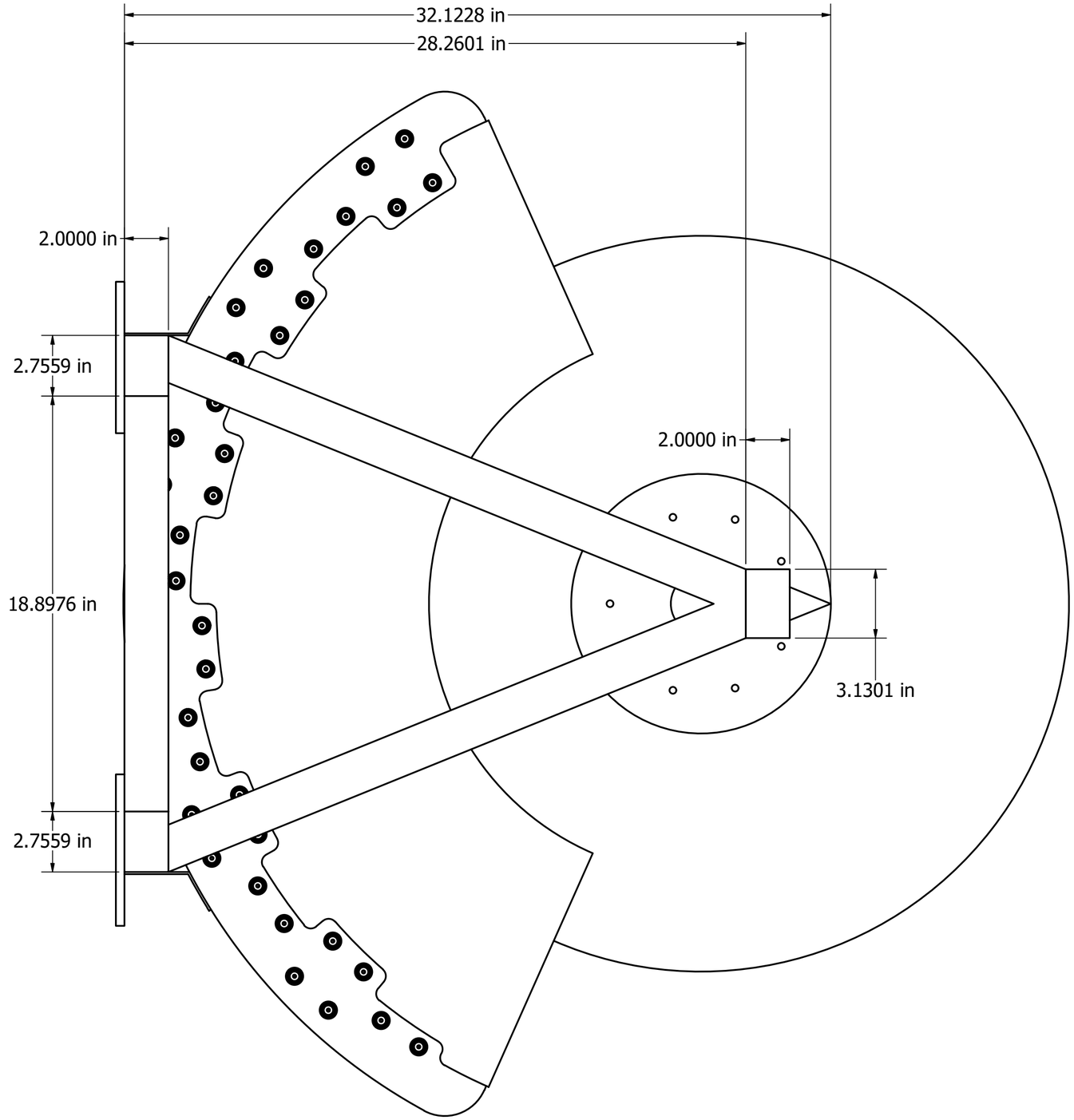

Designed by	Drawing by	Date	Approved by	Date	Quantity	Material
ALEXANDRE	LAWRENCE	3/12/2019	PAVEL	3/12/2019		

MATSING® LENS TECHNOLOGY ENABLED

MS-18H90

MS-18H90 (in)

Revision 1.0

Sheet 6 / 6